## Experiment Name: AC_versus_DC_Signals

# Overview

**Cosmin Iorga, Ph.D.**
Instructor
Engineering
UCLA Extension

# Fundamental Concepts in Electrical Engineering Lab3 - AC versus DC Signals

## Objectives

- Learn the fundamental physical mechanisms of AC current flow in electric circuits
- Learn the significance of root-mean-square (RMS) and average of a sinusoidal signal
- Construct an experiment and measure the significant characteristics of a sinusoidal signal, rectangular signal, and triangular signal.
- Construct a circuit stimulated by a sinusoidal signal and learn how to apply Ohm's law to the AC voltages and currents in the circuit
- Construct a circuit made of three resistors in series stimulated by a sinusoidal signal and learn how to apply Kirchhoff's Voltage law to the AC voltage drops in this circuit.

## Components

- Resistors: 1Ohm (1%, 0.25W) 3 pieces,100Ohms (10%, 0.5W), 560Ohms(10%,0.5W), 820Ohms(10%, 0.5W)
- Circuit prototyping breadboard
- Electric wires

## Equipment

- Tektronix TBS 1202B-EDU Oscilloscope
- Function Generator (1Hz - 2MHz)

## Theory

So far we have learned about electric current and we have seen how it flows from one terminal of the battery through the external circuit and back into the battery through the other terminal.

This was a continuous current also named DC current. Let's think now at alternating current, named AC current. How do you think the AC current flows in a circuit? How do you think electrons flow in an AC electric current?

An easy way to imagine an alternating current is to look at the battery model shown in the previous figures and consider that the “pump” inside alternates the direction towards it pumps electrons. Like for example it can pump electrons towards the terminal at the bottom for one millisecond and then switch direction and pump electrons towards the terminal at the top for another millisecond, and then continuing like this back and forth one millisecond in each direction. As a result, the electrons through the entire circuit (including the load too) will move back and forth one millisecond each way. This is called alternating current and it is abbreviated AC. The voltage at the terminals of the source changes polarities as the internal “pump” changes the direction in which it pushes electrons. The term “alternating current” is typically used for currents (and voltages) that alternate their intensity following a sinusoidal function. This not always the case; sometimes the variation follows different functions like square wave, triangle wave, or just any arbitrary periodic variation. These time-varying voltages can be visually measured with an oscilloscope.

**What is an oscilloscope and how can we measure time varying signals with it?**

In a very simplistic way, an oscilloscope is an instrument that can be used to visualize how signals vary in time. The following figure shows the graphical representation of a square wave signal and the image of this signal as shown on the display of an oscilloscope:

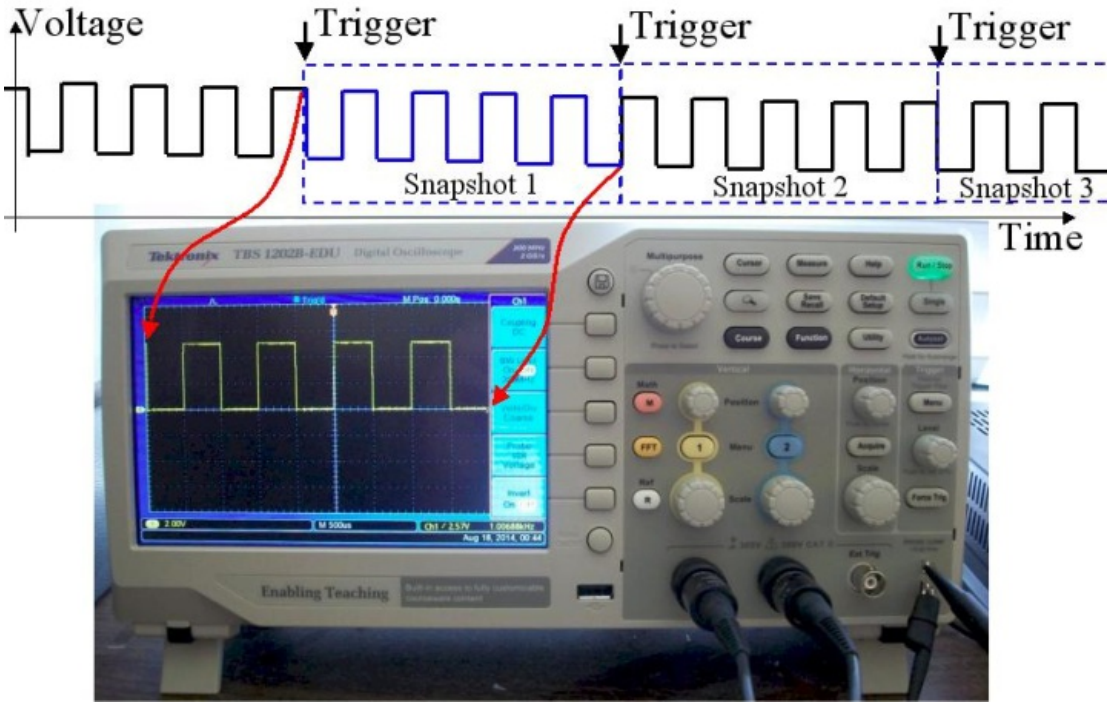


We can view the oscilloscope as an instrument that captures successive snapshots of the signal waveform and display them one after another on the screen. The trigger function of the oscilloscope ensures that each snapshot starts at the same location within the signal period so the image on the display stays stable. The time base function of the oscilloscope ensures that each snapshot has the same length in time, thus when sequentially displaying these snapshots the image is clear and stable.

Here is an example of a sinusoidal signal displayed on the TBS1202B-EDU oscilloscope with my annotations in color pink:

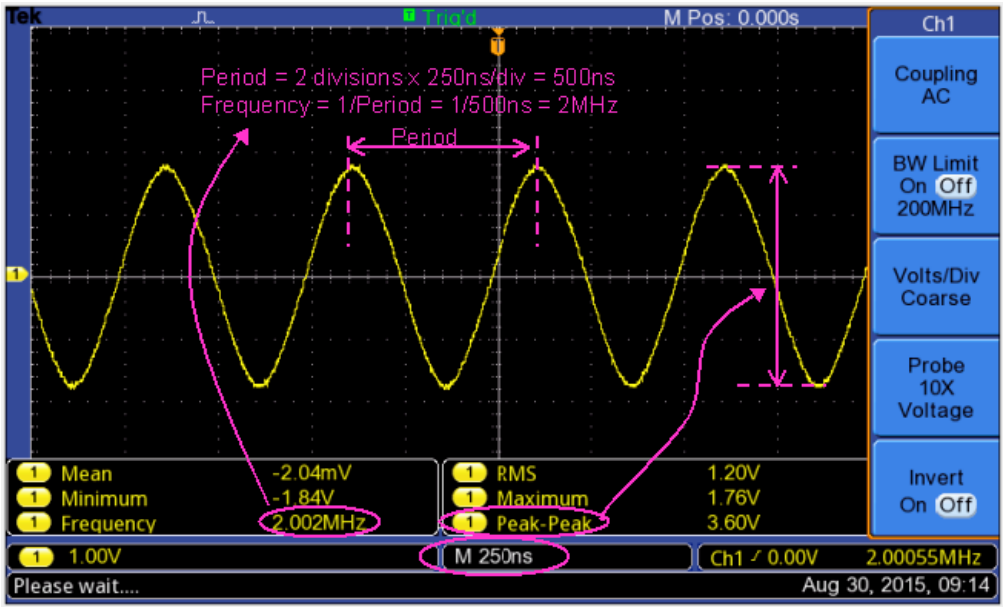


The measurements at the bottom of the screen show the minimum and maximum voltage levels, the peak-to-peak magnitude of about 2V, the mean value of a few millivolts, the frequency of about 2MHz, and the RMS voltage of 680mV. The RMS (root mean square) voltage is what we measure with multimeters when we probe time varying signals. Not all oscilloscopes have built-in measurement for RMS voltage, so in many cases we need to use a digital multimeter (DMM) to measure the RMS value; however, DMMs are usually limited in bandwidth so they do not measure accurately the RMS value of high frequency signals. I like this TBS1020B-EDU oscilloscope since all the built-in measurements work up to the full bandwidth of 200MHz.

**What is the physical meaning of the RMS value of a time varying signal?**

A DMM measures the rms value of a sinusoidal signal, which is equal to the peak voltage multiplied by 0.707.

Here is a clarification for the "rms" (Vpeak*0.707) and also the "average" (Vpeak * 0.636) values of a sinusoidal waveform:

The factors 0.707 and 0.636 result from the following analysis:

0.707 comes from the rms voltage definition. V_rms, is a constant (DC) voltage that produces the same average power dissipation on a resistor as the sinusoidal voltage V_max*sin(ω*t). The power dissipation P = V*I = V^2 / R . So for V_rms, which remember is a DC voltage, it's easy: P_avg = V_rms^2 / R; however, for a sinusoidal voltage P_avg = ( V_max*sin(ω*t) )^2 / R = [V_max^2 * (sin(ω*t))^2] / R . Since these two average powers have to be equal, it results that: V_rms^2 = V_max^2 * (sin(ω*t))^2. The sinusoidal term is an average over many periods of a sin square function, which from trigonometry or from an intuitive graphic (similar to a sinusoid but shifted up and varying between 0 and 1) has the value of 0.5. Inserting 0.5 in the above equation V_rms^2 = V_max^2 * 0.5, and taking square roots on both sides V_rms = V_max * squareroot(0.5) = V_max * 0.707

0.636 comes form calculating the time average of voltage (not power like in the rms case above) for one half cycle. By integrating the sinusoidal voltage over half of period we obtain V_max * (2/pi) = V_max * (2/3.14) =V_max * 0.636

## Experiment Name: AC_versus_DC_Signals

# Procedure

# Step 1

- Connect Channel1 of the oscilloscope to the output of the function generator, as shown in the picture below:

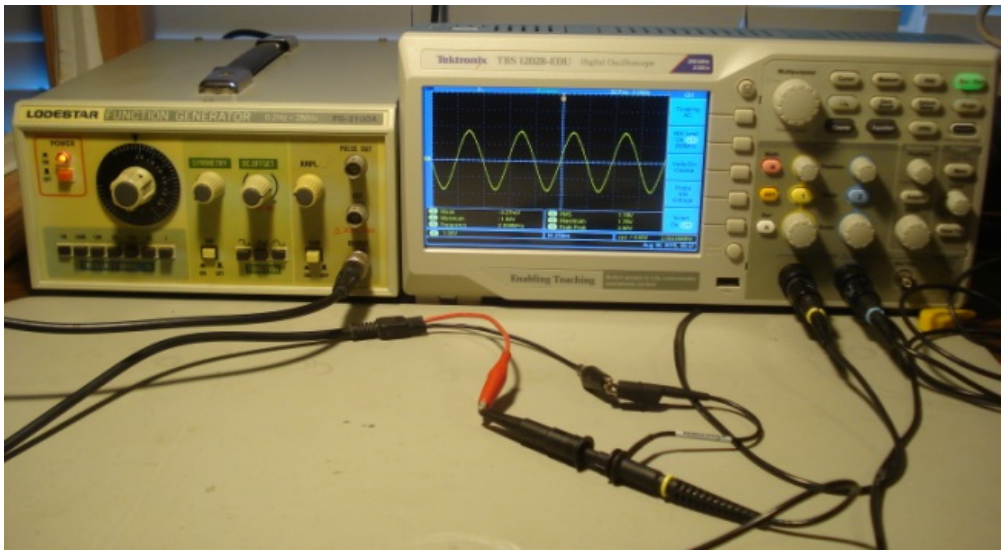


- Set the function generator to sinusoidal type of signal, frequency around 2kHz, and amplitude around 2V.

- Set Channel 1 of the oscilloscope to AC coupling, 1V/div, and align the zero level to the center of the screen.
- Set the timebase to 250us/div and trigger source on Channel1, auto mode, and adjust the level to be within the sinusoidal signal.
- With this settings the oscilloscope should display a sinusoidal signal like the one shown in the picture below:

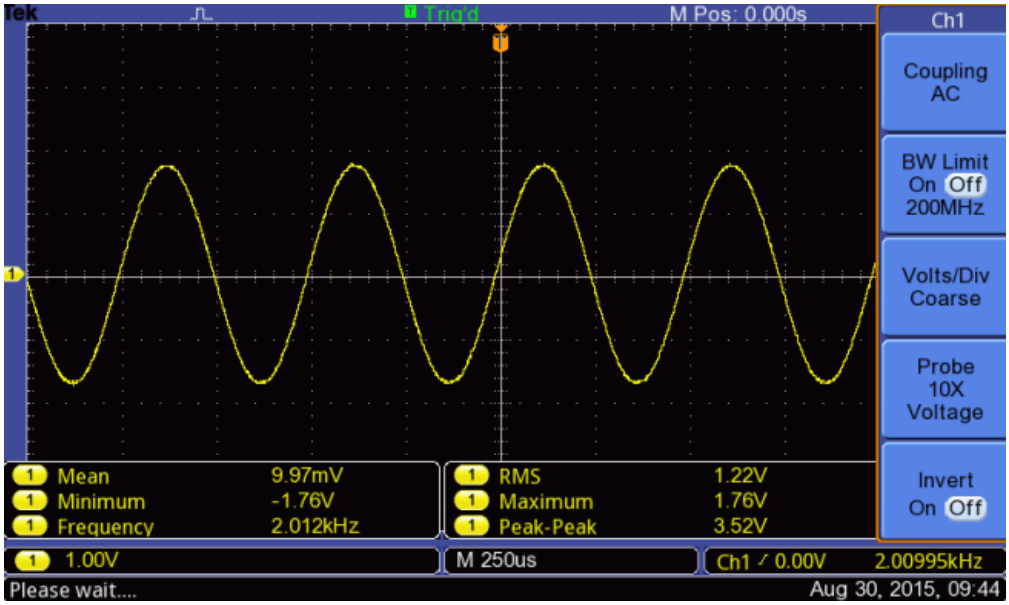


- Use the built-in measure functions of the oscilloscope to dipsplay the frequency, minimum voltage, maximum voltage, peak-peak, mean, and RMS values.
- Insert a screenshot of the oscilloscope displayed waveform and measurements in this step.
- Verify the relationship between signal amplitude, RMS, and Mean quantities as described in the theory section.

# Step 2

- Set the function generator to rectangular type of signal (called also square-wave signal), frequency around 2kHz, and amplitude around 4V.
- Set Channel 1 of the oscilloscope to DC coupling, 1V/div, and align the zero level to the center of the screen.
- Set the timebase to 250us/div and trigger source on Channel1, trigger on rising edge, auto mode, and adjust the level to be within the rectangular signal.
- With this settings the oscilloscope should display a rectangular type signal like the one shown in the picture below:

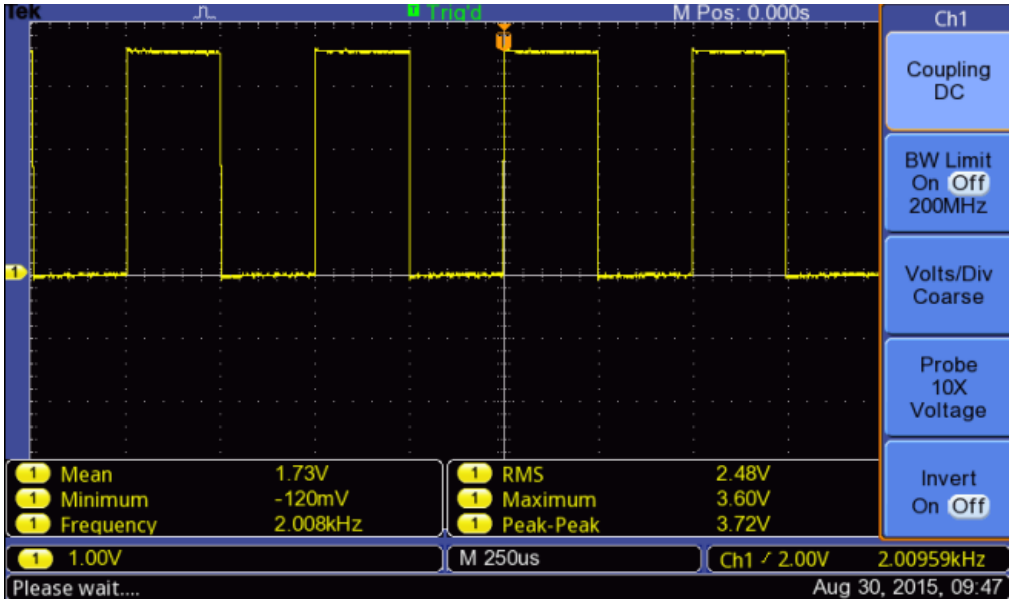


- Use the built-in measure functions of the oscilloscope to display the frequency, minimum voltage, maximum voltage, peak-peak, mean, and RMS values.
- Insert a screenshot of the oscilloscope displayed waveform and measurements in this step.

# Step 3

- Set the function generator to triangular type of signal, frequency around 2kHz, and amplitude around 4V.
- Set Channel 1 of the oscilloscope to DC coupling, 1V/div, and align the zero level to the center of the screen.
- Set the timebase to 250us/div and trigger source on Channel1, trigger on rising edge, auto mode, and adjust the level to be within the triangular signal.
- With this settings the oscilloscope should display a triangular type signal like the one shown in the picture below:

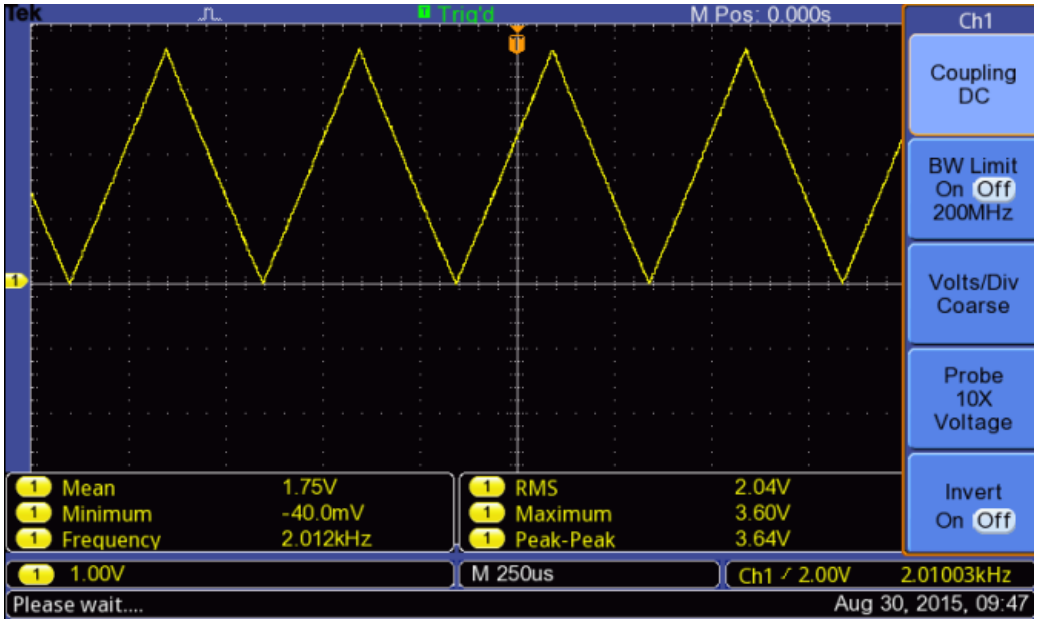


- Use the built-in measure functions of the oscilloscope to display the frequency, minimum voltage, maximum voltage, peak-peak, mean, and RMS values.
- Insert a screenshot of the oscilloscope displayed waveform and measurements in this step.

# Step 4

Construct the circuit shown in the diagram below:

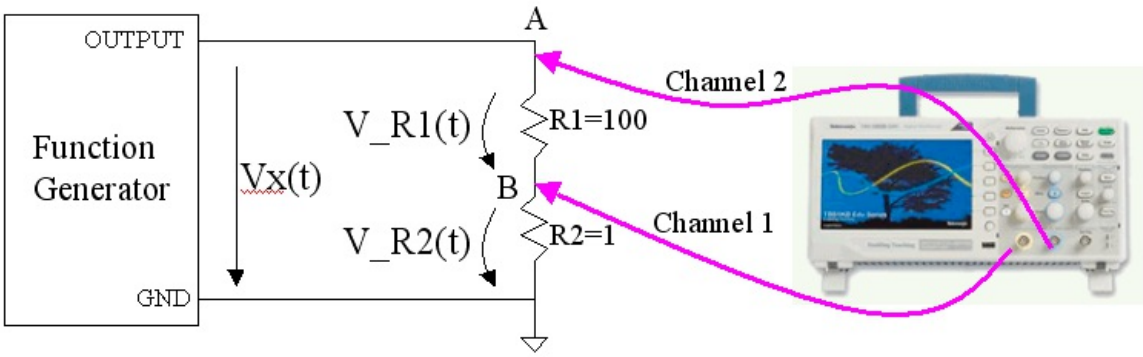


Here is an example picture of this experiment setup:

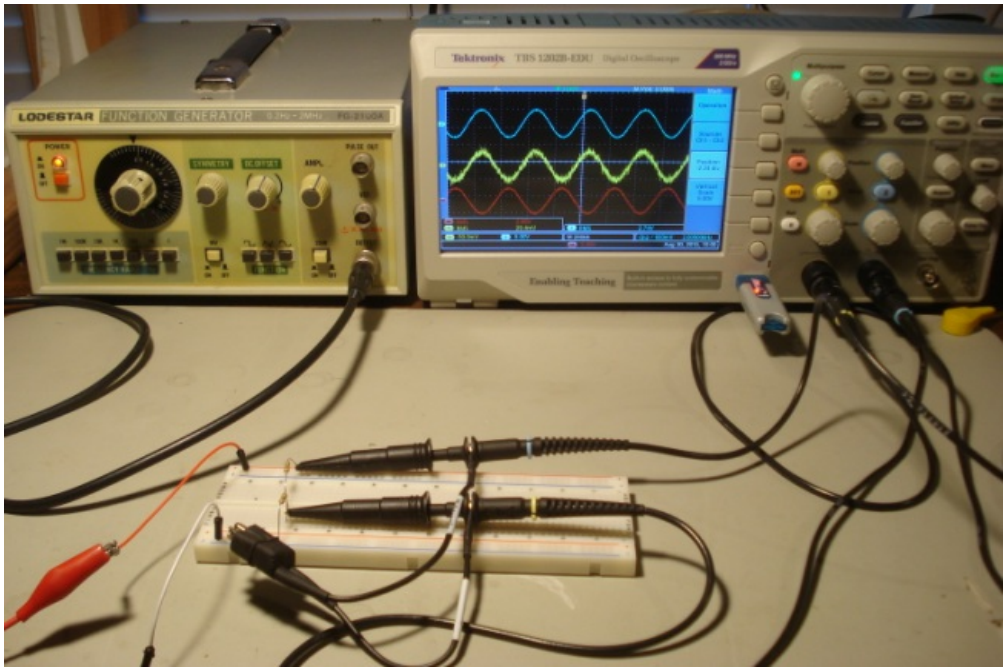


And here is a more detailed picture of the circuit on the breadboard:

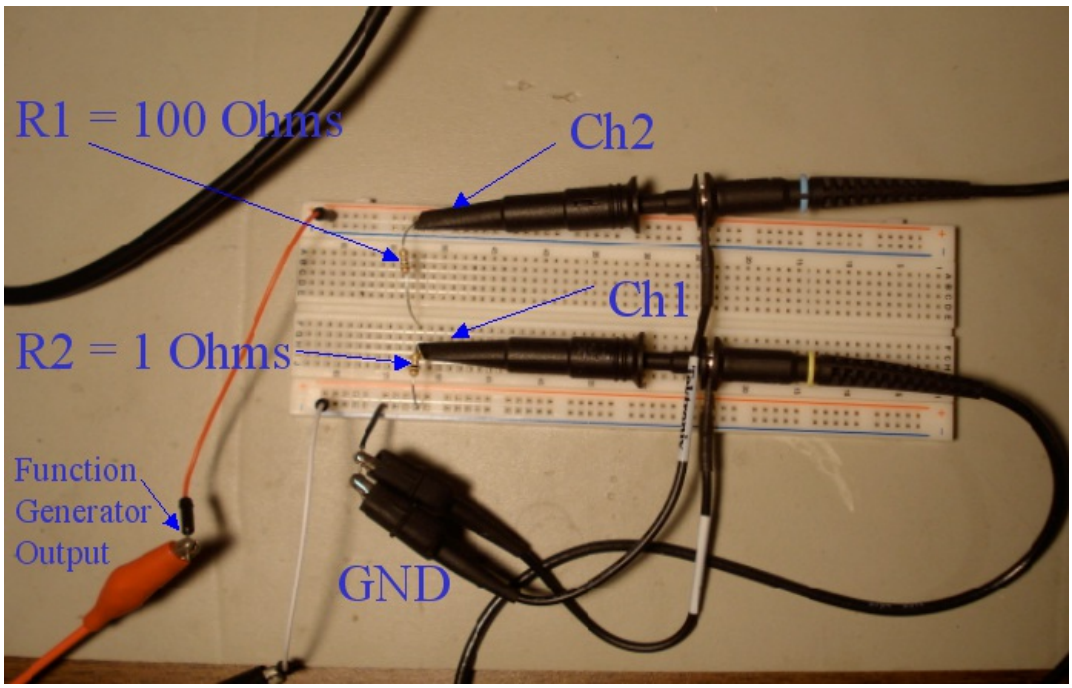


# Step 5

- Set the function generator to sinusoidal type of signal, frequency around 2kHz, and amplitude around 4V.
- Set Channel 1 of the oscilloscope to AC coupling and 50mV/div
- Set Channel 2 of the oscilloscope to AC coupling and 5V/div
- Set the timebase to 250us/div and trigger source on Channel2, auto mode, and adjust the level to be within the sinusoidal signal.
- Set the oscilloscope built-in Math function to Ch2 - Ch1 and vertical scale 5V/div
- Set the oscilloscope built-in Measure function to measure the RMS values of Channel 1, Channel 2, and Math signals.
- With this settings the oscilloscope should display a sinusoidal signal like the one shown in the picture below:

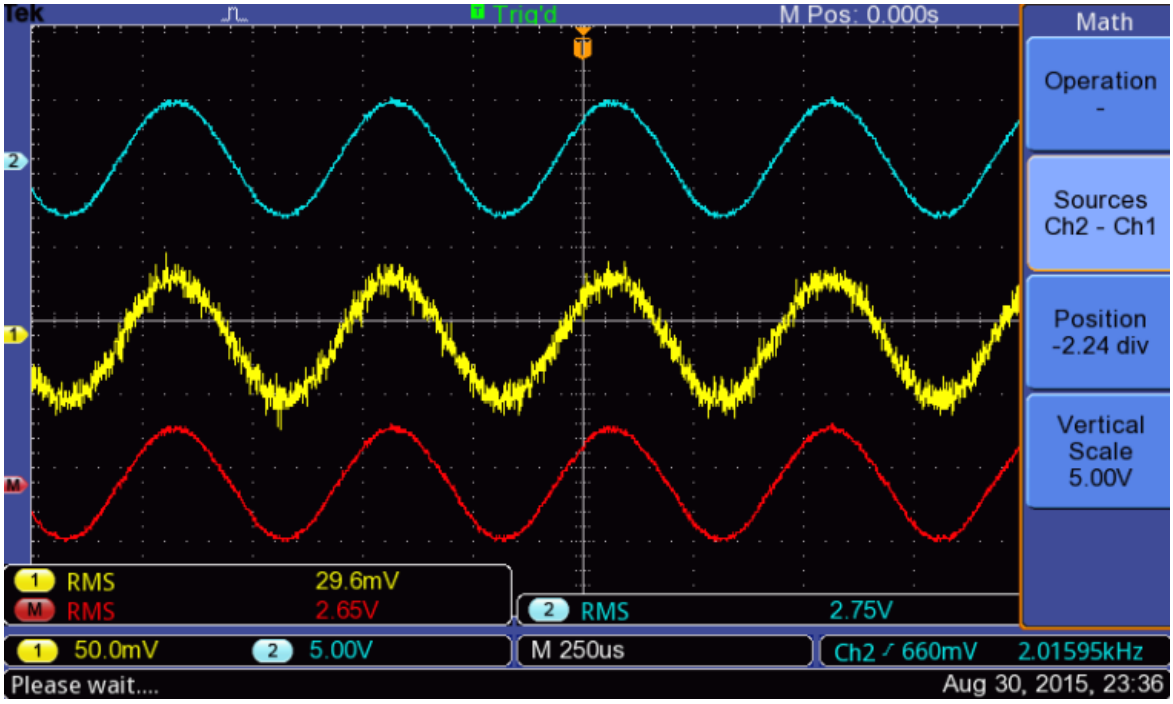


- The Math trace represents the sinusoidal signal on R1 resistor, and Channel 1 trace represents the sinusoidal signal on R2 resistor.
- Determine the RMS current through this circuit from the voltage measured at node B of the circuit (Channel 1). In the waveforms example shown above the RMS current = 29.6mA, which is determined by translating 29.6mV measured on Ch1 to 29.6mA using I = V/R formula with R=1Ohm
- Insert a screenshot of the oscilloscope display showing these three traces and the measured RMS values.
- Apply Ohm's law for the resistor R1 (100 Ohms) in this circuit by dividing the RMS voltage to the RMS current. What does the result represent and what was the expected value?
- Did this experiment prove that Ohm's law is valid for AC signals?

# Step 6

Construct the series circuit in the diagram below and connect it to the function generator.

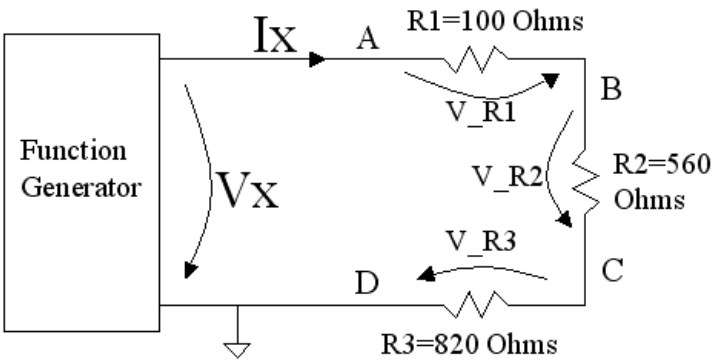


Here is an example of testbench circuit:

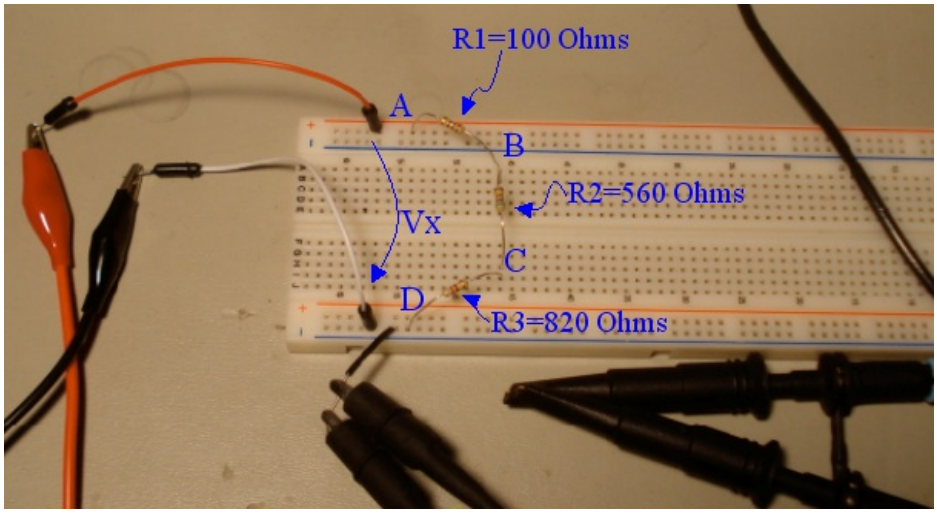


# Step 7

- Connect Channel1 to node A and Channel2 to node B of the circuit. The ground clips are connected to the ground node of the circuit (Node D). Here is a picture of this setup on the schematic on the testbench:

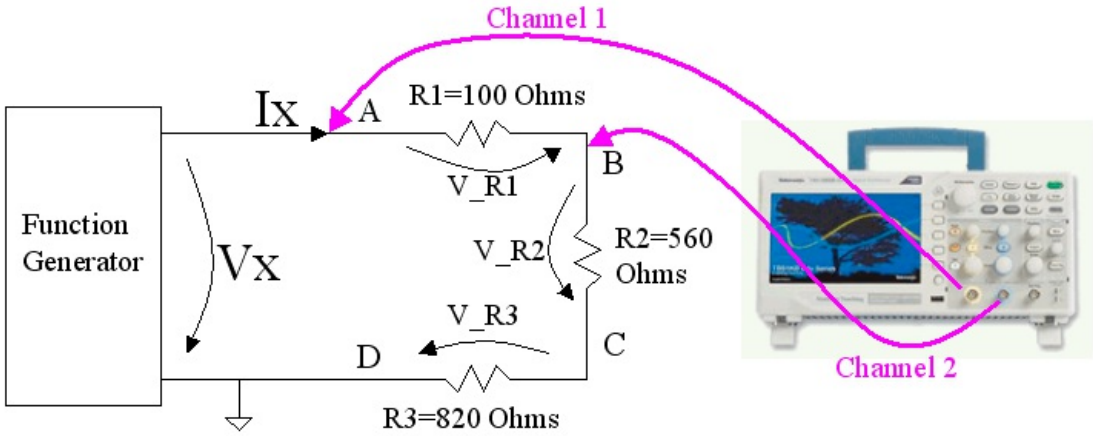


- In this picture Channel1 is the yellow marked probe and Channel2 is the blue marked probe. Set the "Math" built-in function of TBS1202B-EDU oscilloscope to display Channel1-Channel2. Set the built-in measure function to display the "RMS" value of each trace, as shown in the picture below:

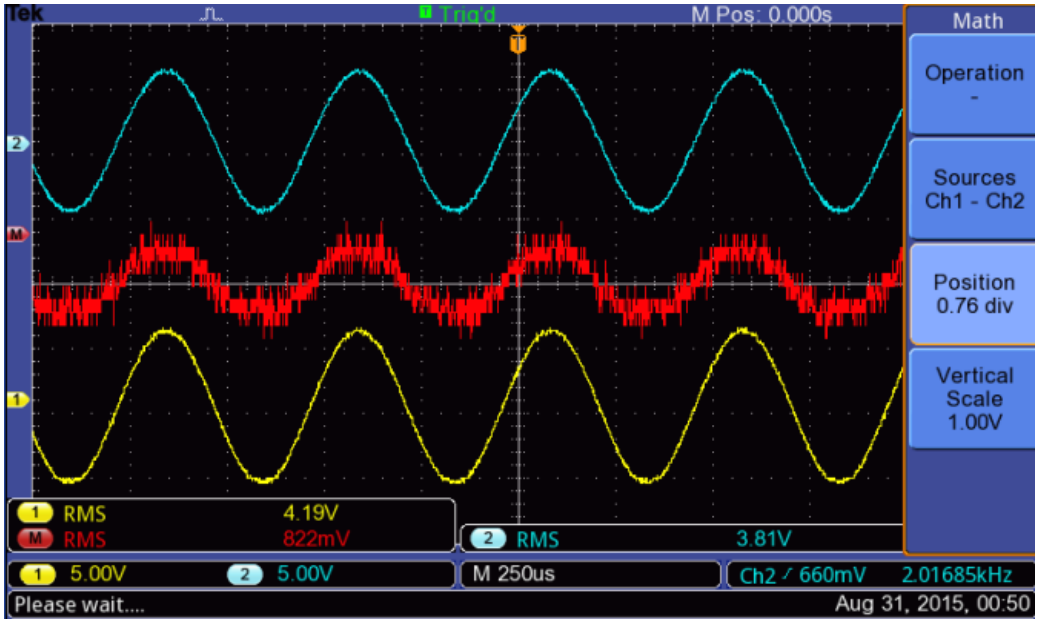


- The measured value of the Math trace represents the RMS voltage drop on R1 resistor. The measured value of Channel 1 represents the RMS value of the function generator output signal. Record these two values since we will use them in Step 10 below.
- Insert a screenshot of the oscilloscope display in this step.

# Step 8

- Connect Channel1 to node B and Channel2 to node C of the circuit. The ground clips are connected to the ground node of the circuit (Node D). Here is a picture of this setup on the schematic on the testbench:

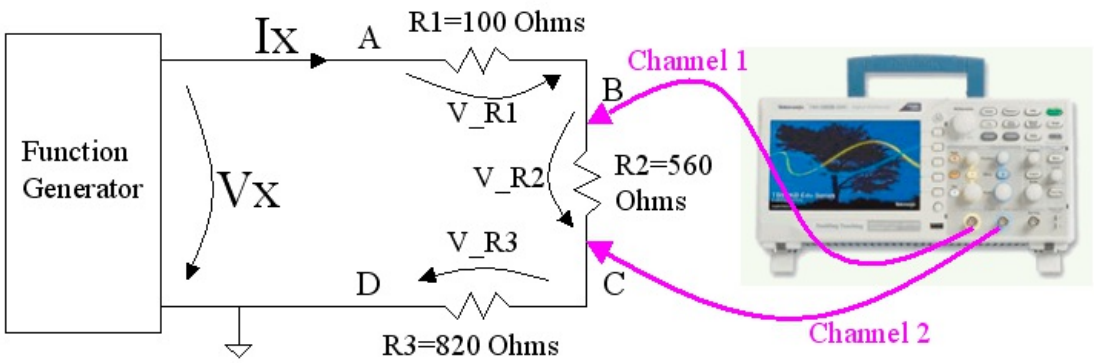


- In this picture Channel1 is the yellow marked probe and Channel2 is the blue marked probe. Set the "Math" built-in function of TBS1202B-EDU oscilloscope to display Channel1-Channel2. Set the built-in measure function to display the "RMS" value of each trace, as shown in the picture below:

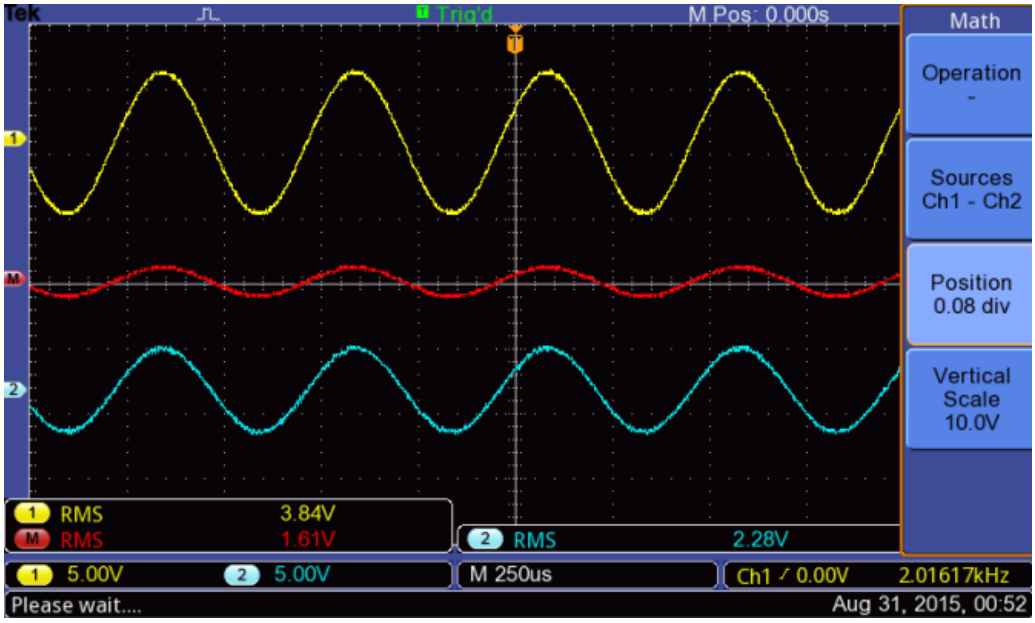


- The measured value of the Math trace represents the RMS voltage drop on R2 resistor. Record this value since we will use it in Step 10 below.
- Insert a screenshot of the oscilloscope display in this step.

# Step 9

- Connect Channel1 to node C and Channel2 to node D of the circuit. The ground clips are connected to the ground node of the circuit (Node D). Here is a picture of this setup on the schematic on the testbench:

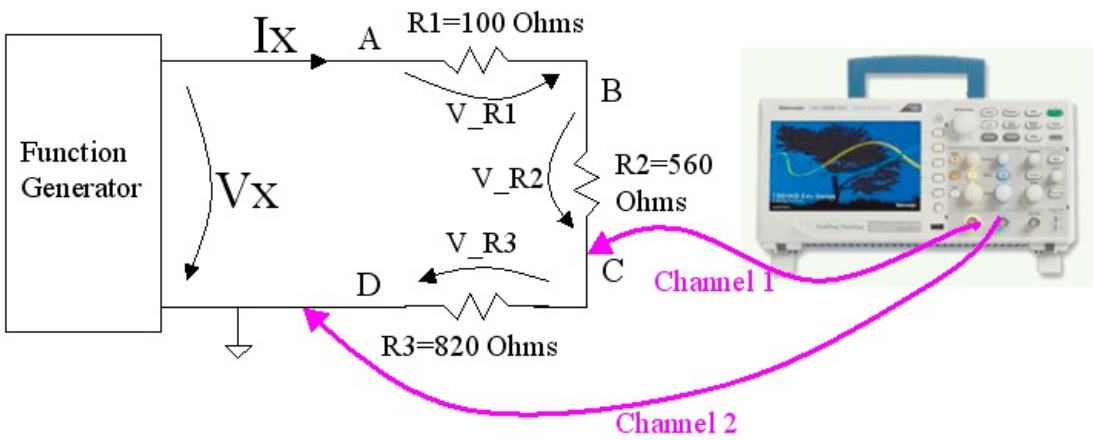


- In this picture Channel1 is the yellow marked probe and Channel2 is the blue marked probe. Set the "Math" built-in function of TBS1202B-EDU oscilloscope to display Channel1-Channel2. Set the built-in measure function to display the "RMS" value of each trace, as shown in the picture below:

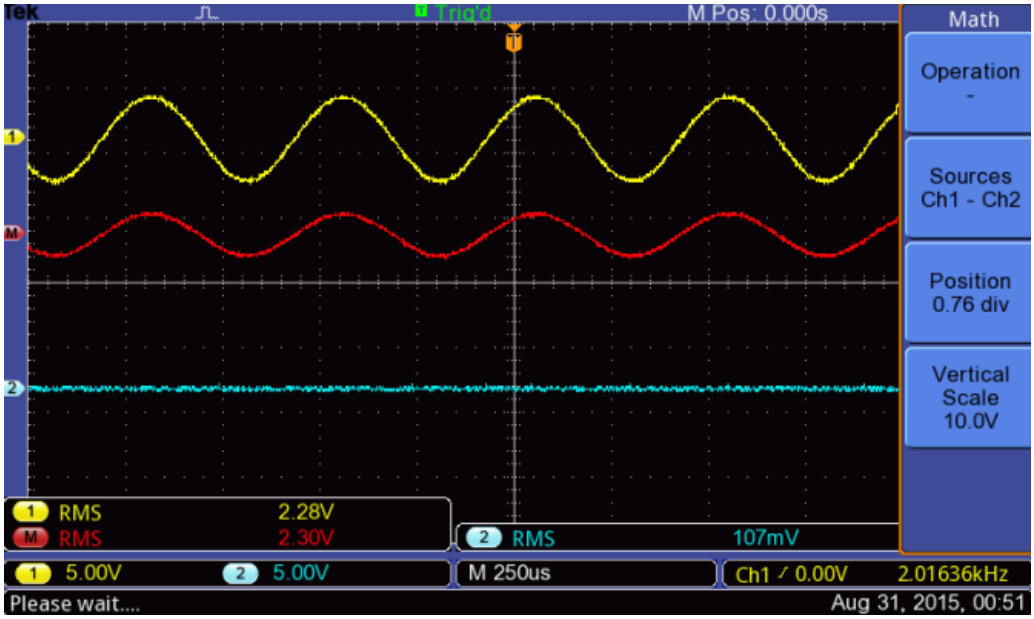


- The measured value of the Math trace represents the RMS voltage drop on R3 resistor. Record this value since we will use it in Step 10 below.
- Insert a screenshot of the oscilloscope display in this step.

# Step 10

- Calculate the sum of the RMS voltages on R1, R2, and R3 resistors, measured in Steps 7,8, and 9.
- Compare this result with the RMS value of the function generator output signal Vx measured in Step 7. Is voltage Vx equal to the sum V_R1 + V_R2 + V_R3?
- Did we prove Kirchhoff's voltage law for AC signals? Explain your answer.