KEITHLEY A GREATER MEASURE OF CONFIDENCE

The Right Tools for the Right Measurement

Jonathan L. Tucker

IN the days of the American gold rush, people spent many years looking for gold with the hopes of striking it rich. On January 24, 1848, the gold rush was officially kicked off by the discovery of gold at Sutter's Mill, in Coloma, California. Once the news of the discovery spread, hundreds of thousands of people flocked to California from all over the United States and abroad to get a piece of the action. Many of the early prospectors retrieved gold from streams and riverbeds using simple panning techniques. Some of the smart gold-seekers developed more sophisticated tools and methods of gold recovery. It was the development and advancement of tools that led many to recover gold worth as much as US $5,000 a day or more that led to great wealth [1]. ***Figure 1*** shows a replica of some gold mining tools. Like the old American gold rush, many new discoveries and often new industries are the result of the development of new measurement instruments and unique measurement techniques. Discoveries have always been marked by breakthroughs in better instruments and better control of materials. This was very true for the development of our current electronics industry based upon silicon. The silicon age, which started in the 20th century, continues to this very day. Our ability to control semiconductors such as silicon (Si), gallium arsenaide (GaAs), and many other III-V compounds was fundamental to the creation of our information age and is the topic of this paper.

CMOS and Beyond

As semiconductor manufacturers migrate to 45nm technology and look beyond this node, significant measurement challenges are emerging. Process development engineers have left the well-behaved world of the Si/SiO_2 (silicon/silicon dioxide)/polysilicon/Al materials system and now immerse themselves in the challenging world of silicon germanium (SiGe), silicon on insulator (SOI), hafnium nitrides (HfNx), Gallium Nitride (GaN), metal gate, low κ, and Cu materials [2]. These new materials demand new measurements for process and device characterization. Some crucial applications include:

- Advanced high κ gate measurements,
- On-wafer RF s-parameter measurements,
- Isothermal DC and RF testing of SOI substrates,
- Characterizing embedded memories, such as MRAM and PRAM, and
- Leakage current measurements down to the femtoamp (10^{-15}A) level.

Unfortunately, as we continue our insatiable demand for smaller and faster consumer electronics, the continued scaling of semiconductors such as silicon and gallium arsenide may be reaching its final stages. The causes of the potential end-of-life of silicon-based technology range from purely physical to economical. Silicon, as a crystalline solid, ceases to exist at length scales less than 10 nanometers (1nm = 10^{-9}m = 10Å) because thermal fluctuations make atoms fluctuate strongly as the dimensions of the material are reduced transforming crystals into amorphous material. Moreover, to reduce the volume of a microchip by a factor of two requires a factor of ten of investment in new technology [3].

If the curtain is to fall on the silicon age as we know it, then we must find and develop new materials that replace silicon that offer higher performance, improved reliability, durability, and have richer qualities. A quick look at Group 14 of the Periodic Table of Elements (***Figure 2***) shows that the evolution from Ge to Si was associated with a jump of one row in the table. If the evolution

Figure 1. Replica of gold mining tools in Coloma, California. Photo courtesy of Jonathan Tucker.

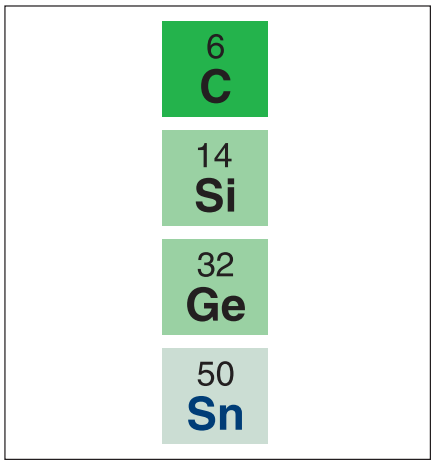

Figure 2. Group 14 of the Periodic Table of the Elements.

continues, then the ultimate material in this column is exactly carbon. It would only seem natural to think about carbon as the next platform for nanoelectronics.

One of the most exciting developments in carbon-based materials is that of graphene. Graphene is a single layer of carbon atoms forming a perfectly stable and clean two-dimensional crystal with very few defects. It has been considered by many as a revolutionary material with electronic and structural properties that surpass conventional semiconductors and metals. Furthermore, graphene is also quite unusual electronically since its electric carriers, the so-called Dirac particles [3], behave as if they were massless.

The challenge with graphene is producing it so it can be useful. In 2004, two researchers at Manchester University, Dr. Andre Geim and Dr. Kostya Novoselov (2010 Nobel Prize Winners for Physics), discovered a means of extracting single-atom-thick crystallites (graphene) from bulk graphite. They pulled out graphene layers from graphite and transferred them onto thin silicon dioxide on a silicon wafer in a process sometimes called micromechanical cleavage or, simply, the Scotch tape technique. The silicon dioxide electrically isolated the graphene and was weakly interacting with the graphene providing nearly charge-neutral graphene layers. The silicon beneath the silicon dioxide could be used as a "back gate" electrode to vary the charge density in the graphene layer over a wide range [4]. Because of the researchers' work, graphene's unique qualities are being considered as the reference material for a post-CMOS technology. If carbon-based electronics are the future of the electronics industry, a whole new set of measurement challenges will be presented. And when there are measurement challenges, there comes the need for innovative new measurement techniques and tools.

Emerging Measurements for a Nanoelectronics World

Understanding how new building-block materials like graphene, carbon nanotubes, silicon nanowires, or quantum dots will perform in the electronic devices of tomorrow demands instrumentation that can characterize resistance, resistivity, mobility, and conductivity over wide ranges. Often, this requires the measurement of very small currents and voltages. The ability to create accurate and repeatable measurements at the nanoscale level is critical to engineers seeking to develop and commercialize these next generation materials.

Only through the use of sensitive electrical measurement tools can the development of nanoelectronic materials evolve. The tools provide the data needed to fully understand the electrical properties of new materials and to determine the electrical performance of new nanoelectronic devices and components. Instrument sensitivity must be much higher because electrical currents are much lower, and many nanoscale materials exhibit significantly improved and unique properties, such as carrier mobility. The magnitude of measured currents may be in the femtoamp range and resistances as low as micro-ohms. Therefore, measurement techniques and instruments must also minimize noise and other sources of error that might interfere with the signal and maintain signal integrity.

Characterizing the unique properties of nanoscale materials and devices without damaging one-of-a-kind structures requires systems that provide tight control over sourcing to prevent device self-heating. With more devices shrinking in size, the demand increases for new kinds of test techniques that are based on scientifically robust interpretations of the data and that are supported by traceable measurements back to national measurement institutions. Namely, as devices get smaller, the method of testing changes. No longer can one send sizable currents through devices to test them. A current too large can irreversibly damage a component.

What are needed are shorter bursts of energy. These come in the way of pulse testing. An instrument that can deliver an extremely short duration pulse, on the order of a few nanoseconds wide, with tight control over parameters such as rise time, fall time, pulse width, voltage, and current levels would be a great asset to engineers and scientists doing cutting edge research.

In addition, voltage pulsing can produce much narrower pulse widths than current pulsing, so it is often used in experiments such as thermal transport and transient I-V testing, in which the time frame of interest is shorter than a few hundred nanoseconds. High amplitude accuracy and programmable rise and fall times are necessary to control the amount of energy delivered to a nanodevice.

Consequently, the need for pulsed sources has been growing over time. This need is driven, in part, by the higher operating speeds of today's electronic circuits. The higher operating speed requires test equipment that can produce simulated clock and data signals at the rate that the circuits will actually perform. Also, analog components used in these circuits behave differently at higher speeds, so they can't be characterized at DC using traditional DC methods.

High speed I-V testing can be performed on a variety of devices made from carbon nanotubes (CNTs), semiconductor nanowires, graphene-based devices, molecular-based electronics, and MEMs structures such as switches. Characterizing the electrical properties of these delicate nanoelectronic components and materials requires instruments and measurement techniques optimized for low power measurements.

Pulsed I-V Measurements

Low temperature materials and nanodevice structures can easily be altered or destroyed by the Joule-heating effects when making traditional DC measurements. Pulsed electrical testing reduces the total energy dissipated in a device, and thus the potential for damage. Pulsed I-V measurements can also prevent current drifting in measurements that can occur during traditional DC measurements. For testing CNT FET-based sensors, gate pulsing allows faster refreshing of the sensor. Pulsed I-V measurement will also be an invaluable tool for graphene research.

To perform pulsed I-V measurements, the nanodevice under test is excited for a very short time interval with a voltage pulse high enough to produce a quality measurement. This pulse width can range from tens of nanoseconds to milliseconds in length, depending on the impedance and capacitance of the device or the application. A waveform capture function can be used to verify an appropriate pulse width prior to the actual pulsed I-V sweep.

Figure 3 shows a pulsed I-V measurement configuration for a carbon nanotube-based FET. In this diagram, Channel 1 is connected to the drain of the CNT FET and Channel 2 is connected to the gate. The source terminal

of the CNT is connected to the pulse-measure unit (PMU) common terminal, which is the outside shell of the coax cable.

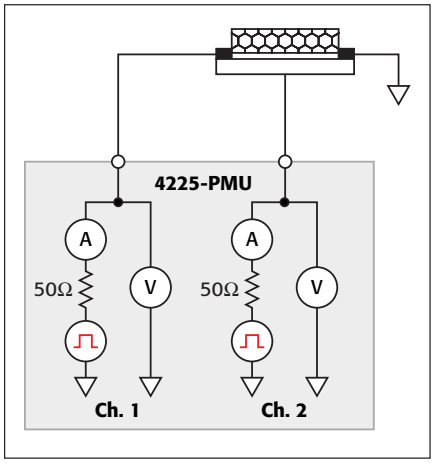

Figure 3. Typical Pulsed I-V measurement configuration for a CNT-based FET.

Thoroughly characterizing a nanoscale device, material, or process requires the ability to make three types of measurements. The first two types are the most familiar: precision DC I-V measurements (typically made with high precision source measure units or SMUs) and AC impedance measurements (in the semiconductor industry, often made with a capacitance-voltage or C-V meter). Ultra-fast I-V or transient I-V measurements represent the last, and most difficult to achieve, segment of this characterization triangle. Until recently, research labs might have needed up to three different test systems to obtain all three measurement types. In addition to the expense of purchasing and maintaining multiple systems and training personnel to use them, this approach also made it difficult to combine different measurement types in a single application or to correlate the results from different types of measurements accurately when they were made at different times under varying test conditions and with different measurement instrumentation.

Ultra-Fast I-V: A New Approach to Pulsed/High-Speed I-V Measurements

Early implementations of high-speed (i.e, pulsed) I-V testing were developed to address applications such as characterizing high-k dielectrics and SOI isothermal testing and low power nanomaterials and devices. When tested using traditional DC I-V techniques, the levels of currents often used in the test resulted in the materials retaining the self-heat generated by the test signal, skewing their measured characteristics. In cases where testing took place at the nanoscale, the materials or devices were either damaged or destroyed as ***Figure 4*** illustrates. Testing with pulsed signals reduces this effect.

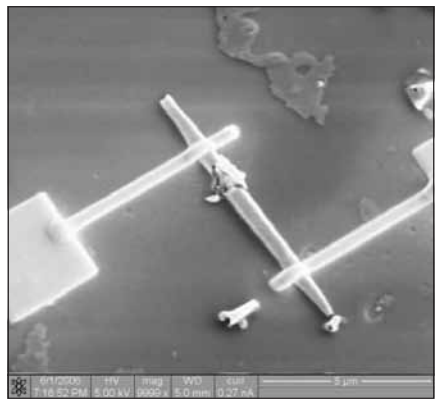

Figure 4. Example where too much DC melted a nanoscale structure. Nanotube image courtesy of Dr. Jiyoung Kim, University of Texas at Dallas.

Traditional high-speed-pulse/measure test systems typically involved an external pulse generator, a multi-channel oscilloscope, specially designed interconnect hardware, and software to integrate and control the instruments. Unfortunately, this approach tended to create latencies that complicated the coordination of signal source and measurement functions.

Depending on the instruments and how well they were integrated, it could also place limitations on how short the pulses and their duty cycle could be. Despite these limitations, users of these early pulsed I-V test systems soon began applying them to a variety of other characterization tasks, including non-volatile memory testing and ultrafast negative bias temperature instability (NBTI) reliability testing. However, given their somewhat limited dynamic range, these systems remained something of a specialty technology. In order to become a mainstream test technology, the next generation of ultra-fast I-V testing systems would have to provide a very broad source and measure dynamic range.

A growing number of nanoscale and even semiconductor test applications require the use of more than one measurement type, which makes a single test system with multiple measurement capabilities highly desirable. For example, charge pumping (CP) is a well-known measurement technique for analyzing the semiconductor–dielectric interface of MOS structures. Important information about the quality and degradation of a device can be extracted from charge pumping current (ICP) measurement results, including the interface trap density and the mean capture cross section. Pulsing a gate voltage and measuring a DC substrate current simultaneously is the basis for the various charge pumping methods, so both a pulse generator and sensitive DC ammeter are required to make these measurements.

To address this measurement challenge, Keithley Instruments developed a state-of-the-art Ultra-Fast I-V Module for its semiconductor characterization system. This solution makes it possible to integrate all three required measurement types, DC I-V, CV I-V, and Ultra-fast I-V measurements, into a single test system (***Figure 5***) that's optimized for emerging measurement applications like ultra-fast general-purpose I-V measurements; pulsed I-V and transient I-V measurements; isothermal testing of medium-sized power devices; materials testing for scaled CMOS, such as high-k dielectrics; and for advanced "exotic" materials testing such as for carbon nanotubes and graphene where four-probe resistivity (ρ, σ), Hall Effect measurements, and Field Effect measurements are performed to understand carrier mobility.

With this new technology, critical measurements of nanomaterials and nanoelectronics are achievable with measurements as fast as 10ns. The measurement technology can be used to perform three types of ultra-fast I-V tests: pulsed I-V, transient I-V, and pulsed sourcing. ***Figure 6*** illustrates these three modes.

Figure 5. Semiconductor Characterization System with new Ultra-fast Pulse I-V

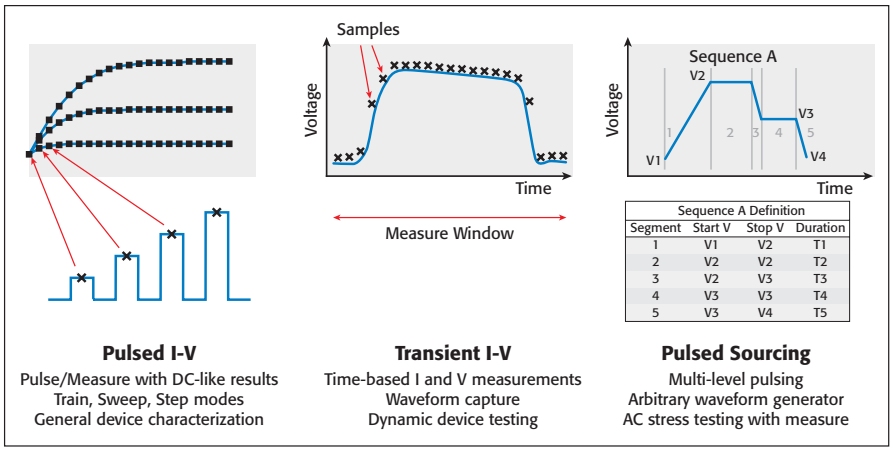

Figure 6. The three modes of Ultra-Fast I-V testing.

Table 1— Summary of differing cabling requirements for different measurement types.

DC I-V measurements	• Triaxial cables • Kelvin connection • Isolated, driven guards
LCR/C-V measurements	• Coaxial cables • Kelvin connection • Shields connected at the probe tips
Ultra-fast I-V measurements	• Coaxial cables • Non-Kelvin connection (single cable) • Shields connected at the probe tips • Shield optionally connected to a probe tip

"Pulsed I-V" refers to any test with a pulsed source and a corresponding high speed, timed-based measurement that provides DC-like results. The current and/or voltage measurement is an average of readings taken in a predefined measurement window on the pulse. This average of readings is called the "spot mean." The user defines the parameters of the pulse, including the pulse width, duty cycle, rise/fall times, amplitude, etc.

"Transient I-V" or waveform capture is a time-based current and/or voltage measurement that is typically the capture of a pulsed waveform. A transient test is typically a single pulse waveform that is used to study time-varying parameters, such as the drain current degradation versus time due to charge trapping or self-heating. Transient I-V measurements can be made to test a dynamic test circuit or can be used as a diagnostic tool for choosing the appropriate pulse settings in the pulsed I-V mode.

"Pulsed sourcing" can involve outputting user-defined two-level pulses, outputting multi-level pulses, using a segment ARB approach, or outputting an arbitrarily defined waveform using the arbitrary waveform generator. A segment ARB approach creates a waveform or waveforms from segments defined with separate voltages and time durations.

Addressing Cable Requirements for Different Measurement Types

One of the greatest challenges associated with integrating DC I-V, C-V, and ultra-fast I-V measurement capabilities into a single solution is that the cabling required for each measurement type is fundamentally different. Although the cabling from the instrument to the probe station bulkhead and feed thru is fairly straightforward, the cabling from the bulkhead to the probe tips can be confusing and difficult.

- DC I-V measurements are made using four triaxial cables. Guarding is necessary to achieve low current I-V measurements, which makes the use of triaxial cables necessary for these measurements. The measurement signal is carried on the center conductor, the inner shield is driven as a guard for the signal, and the outer shield is used for safety to shield the user from high voltages that may be applied to the guard and signal conductors. Four cables are necessary to achieve a remote sense, or Kelvin, connection to allow the instrument to sense the voltage at the device accurately.
- C-V measurements are made using four coaxial cables. The outer shells of the coaxial cable connectors are electrically tied together to control the characteristic impedance the signals see. All four cables' outer shells must be interconnected near the device under test (DUT).

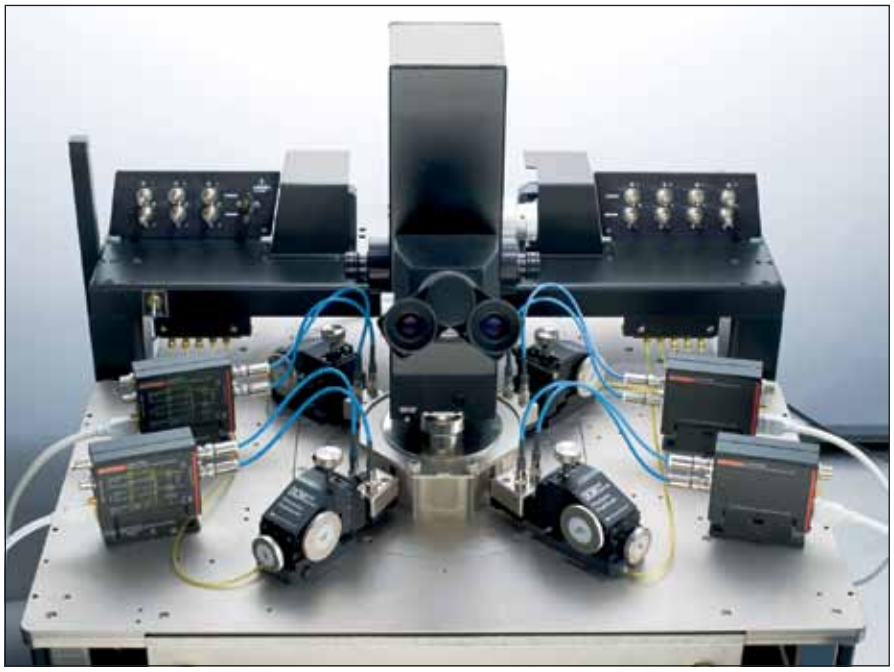

Figure 7. The remote amplifier/switches and the multi-measurement performance cabling used to connect them to the probe manipulators on the wafer prober are critical to integrating accurate ultra-fast I-V, C-V, and precision DC I-V measurements into the same parametric analysis system.

- Ultra-fast I-V measurements require the highest bandwidth of the three measurement types, so the cable must have characteristic impedance that matches the source impedance to prevent reflections off the DUT from reflecting off the source. Ultrafast I-V testing does not use a remote sense cable and is the only one of the three measurement types that connects the DUT to the outer shield of the cable.

This integration challenge was addressed by the development of a high-performance multi-measurement cabling system that can support I-V, C-V and ultra-fast I-V measurements, reducing the burden on the system operator who would otherwise be forced to go through the laborious process of re-cabling the connections from the test instrumentation to the prober every time a new measurement type was required. This solution (***Figure 7***) maximizes signal fidelity by eliminating the measurement errors that often result from cabling errors.

Conclusion

As we begin to see what could be the end of the silicon revolution and a transition to a nanotechnology/carbon based electronics era, it is clear that we need to develop new measurement techniques and tools. The continued scaling of electronics creates new problems that must be measured and understood before any kind of commercialization and mass production can take place. Using the measurement triad of DC I-V, CV, and the new Ultra-fast I-V provided in the aforementioned characterization tool increases the potential for new discoveries to be made in the challenging world of semiconductor scaling and nanoscience. KEITHLEY

References

[1] "California gold rush," Wikipedia, [Online] Available: http:// en.wikipedia.org/wiki/California_Gold_Rush.

[2] P. Hulbert, "New materials and processes call for new test techniques and instrumentation", Keithley Instruments, Inc., February 2007, [Online] Available: http://www.keithley.com.

[3] A. H. Castro Neto, "The carbon new age", Materials Today, vol. 13, no. 3, March 2010, pp 12-17.

[4] "Graphene", Wikipedia, [Online] Available: http://en.wikipedia. org/wiki/Graphene#cite_note-Nov_04-7.

[5] L. Stauffer, "The challenge of integrating three critical semiconductor measurement types into a single instrument chassis", Keithley Instruments, Inc., March 9, 2010, [Online] Available: http://www.keithley.com/data?asset=52840.

About the Author

Jonathan Tucker (jtucker@keithley.com) is the Senior Marketer for Advanced Scientific Research Instruments and Research and Education business at Keithley Instruments in Cleveland, Ohio. He joined Keithley Instruments in 1987 and has held numerous positions including Test Engineer, Applications Engineer, Applications Manager, and Product Marketer. He is a Senior Member of IEEE and is currently the IEEE Nanotechnology Council Standards Committee Chair. He holds a BS in Electrical Engineering from Cleveland State University and an MBA from Kent State University.

Printed in the U.S.A. No. 3117 3.1.11