BSXUSB31 & BSXPCI4CEM
Receiver Testing Applications

Instructions

077-1365-00

BSXUSB31 & BSXPCI4CEM
Receiver Testing Applications

Instructions

Register now!
Click the following link to protect your product.
► **www.tek.com/register**

www.tek.com

077-1365-00

Contacting Tektronix

Tektronix, Inc.
14150 SW Karl Braun Drive
P.O. Box 500
Beaverton, OR 97077
USA

For product information, sales, service, and technical support:

- In North America, call 1-800-833-9200.
- Worldwide, visit www.tek.com to find contacts in your area.

Table of Contents

List of Figures

Preface

This document provides high-level information on using BSXUSB31 and BSXPCI4CEM software products with the BERTScope BSX series instruments. These products are software products downloadable from the the Tektronix website.

Related documentation

The following documentation can be downloaded from the Tektronix website at www.tek.com:

- *BSX Series User Manual*. This document provides basic user information for the BSX series products. Tektronix part number: 077-1288-xx.
- *BSX Series Installation & Safety Technical Reference Manual*. This document provides basic instrument installation information as well as Safety and Compliance information for the BERTScope BSX series instruments. Tektronix part number: 071-3496-xx.
- *Online help*. Touch a control on the screen and the select the “Help on ...” listing for help on that control or feature. The online help is part of the BSX products, available from the Help menu.
- *Remote control guide (PDF)*. This document provides online help commands used to control the BSX products from remote locations. Tektronix part number: 077-1284-xx.

  This document is also located on the BSX-series BERTScope instrument in the following location: `C:\Program Files\BERTScope\Help`. The software release notes are also located in this folder.

Introduction

The BSXUSB31 & BSXPCI4CEM Receiver Testing Application Software provides a means of testing USB3.1 and PCIe applications with the BERTScope BSX series instruments. Four protocols are supported:

- USB3.1 Gen1
- USB3.1 Gen2
- PCIe 3.0
- PCIe 4.0

Each protocol requires specific test setups and instructions for running the tests.

After purchasing the test software from Tektronix, you should receive a letter containing an activation key for your software along with a summary of activation instructions. You need to enter the activation key before using the actual software.

Downloading the receiver testing application software

If you have not already done so, download the BSXUSB31 & BSXPCI4CEM Receiver Testing Application Software from www.tektronix.com.

The instructions in this document provide examples of the hardware connections for the instruments and typical test setups. Refer to the software application for specific information for running each test.

Welcome menu

The Welcome menu appears when you first start the software application.

Select the protocol for your application from the drop-down list in the center of the window and then click **Select**.

Upon starting the application for your protocol, you will see a window similar to the following to enter an activation code.

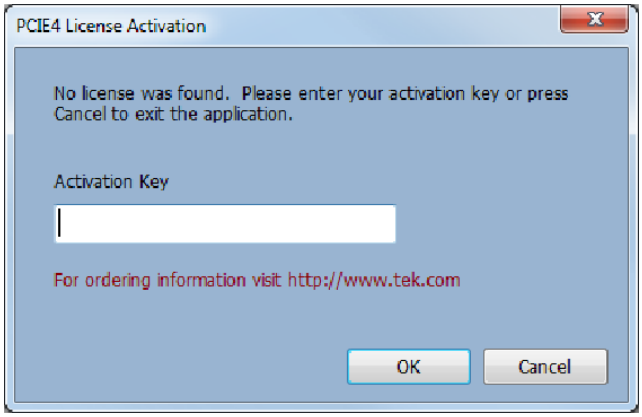

Figure 1: License Activation menu

A valid code needs to be entered before using the software application. Upon entering a valid code, you will see a message indicating the activation was successful.

NOTE. *The program will not continue if you do not enter a valid activation code and you need to exit the application.*

After the activation is successful, follow the online instructions to perform the tests for your protocol.

BSXUSB31 Receiver testing applications

Testing overview

The following procedures provide high-level information to connect the hardware for your USB3.1 Gen1 and Gen2 Rx testing applications. Connection diagrams for each setup are shown later in this procedure. (See page 8, *USB3.1 Typical test setups*.)

Use these procedures to get your BERTScope hardware connected and the software and drivers installed.

1. Download the latest BSXUSB31 software and documentation from www.tektronix.com.
2. Make the Ethernet connections.
3. Make the USB connections.
4. Load and configure the oscilloscope software.
5. Load and configure the USB3.1 Automation software on your PC (this software can instead be loaded on the oscilloscope or BERTScope, but is not recommended).
6. Refer to the online information to run each test.

Required equipment list

You will need the following equipment and software to complete these procedures.

- CR125A Clock Recovery Unit (or equivalent)
- BERTScope BSX320, BSX240, or BSX125 with option STR installed
- DPO/MSO73304, or DPO75004DX/SX, or related real-time oscilloscope with Sigtest V3.2.11 for running USB3.1 Gen1 or Sigtest V4.0.23 for running USB3.1 Gen2
- Ethernet switch,10/100 Mbps minimum
- USB3.1 test fixtures
- (3) Ethernet cables
- (2) USB cables, A–B, (standard accessories with the equipment)
- Refer to the latest USB documentation and application software downloadable from USB.org.
- (Recommended) PC with Windows 7 OS or Windows 10 OS
- (Optional) USB Receiver Testing MOI

Ethernet connections

The setup described here uses an Ethernet switch, but you can use your internal Ethernet network instead.

Using three Ethernet cables, make the following Ethernet connections on the rear panels of the equipment:

1. Insert an Ethernet cable into the Ethernet Switch. Connect the other end of the cable into the BERTScope.
2. Insert another Ethernet cable into the Ethernet Switch. Connect the other end of the cable into the oscilloscope.
3. Insert a third Ethernet cable into the Ethernet Switch. Connect the other end of the cable into the Ethernet port on your computer.

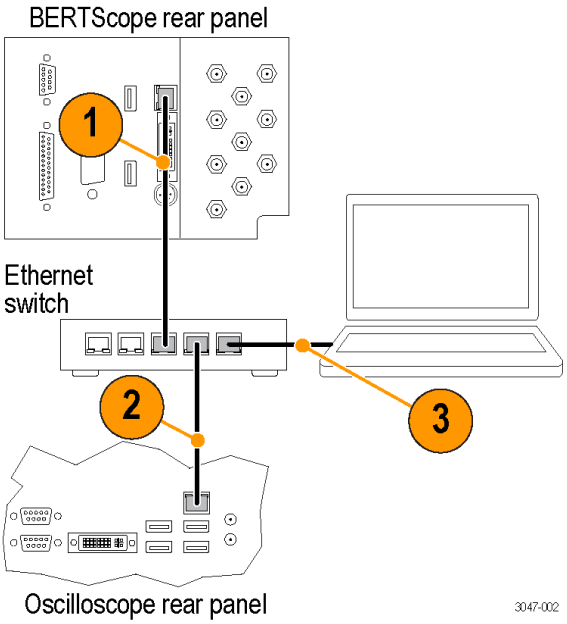

Figure 2: Typical Ethernet connections

USB connections

This setup uses the Clock Recovery Unit as the USB hub. Using two USB A–B cables, make the following USB connections on the rear panels of the equipment:

1. Insert the B end of a USB cable into the Instrument Switch. Connect the other end of the cable into any USB-A connector on the Clock Recovery Unit.
2. Insert the B end of a USB cable into the USB-B connector on the Clock Recovery Unit. Connect the other end of the cable into the BERTScope.

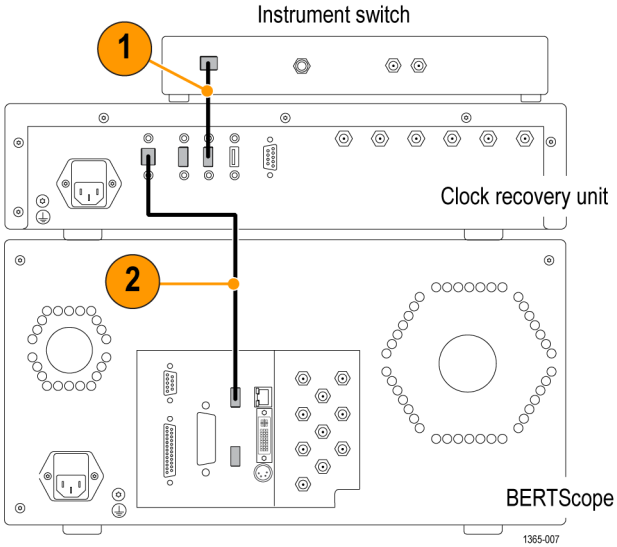

Figure 3: Typical USB connections

Load and configure the software and drivers

The BERTScope and oscilloscope must be loaded with application software. The USB3.1 Automation software should be loaded on a separate PC.

Oscilloscope software

1. Load Visa Socket Gateway on the oscilloscope. This software must be running on the oscilloscope to allow communication between the instruments.
2. Record the IP address; it is used later in the *Windows PC Software* procedure.

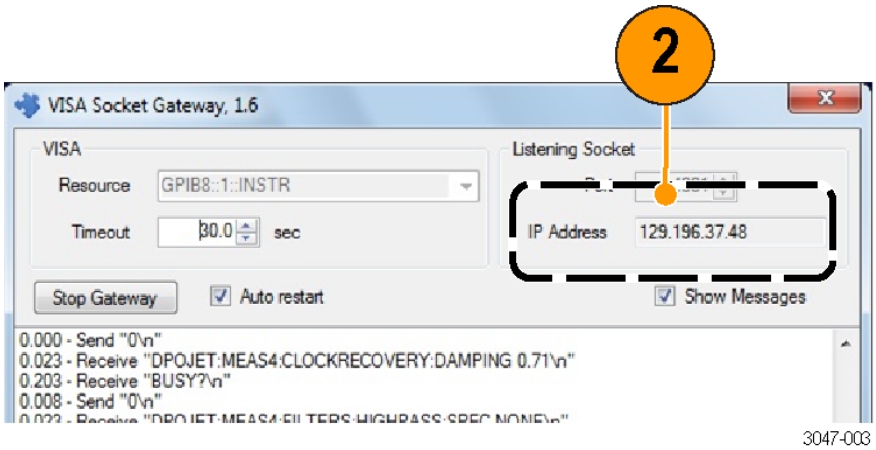

Figure 4: Record the IP address for later use

3. Load the SigTest application software on the oscilloscope.

4. Load the SigTest Server software on the oscilloscope. This software must be running on the oscilloscope to allow communication to the SigTest application.
5. Record the IP address of the SigTest application; it is used later in the *Windows PC Software* procedure.

BERTScope software

1. Power on the Clock Recovery unit, BERTScope, and instrument switch.
2. Install the Switch Control Software on the BERTScope.
   - The Switch Control Software must be running on the BERTScope to allow communication with the Instrument Switch.
   - The Switch Control window displays “Connected to:” when it connects to the Instrument Switch.
3. Enable the Remote Client on the BERTScope:
   - Click start > Programs > BERTScope > Remote Client.
   - Select TCP-IP.
   - Record the IP address; it is used later in the *Windows PC Software* setup procedure.

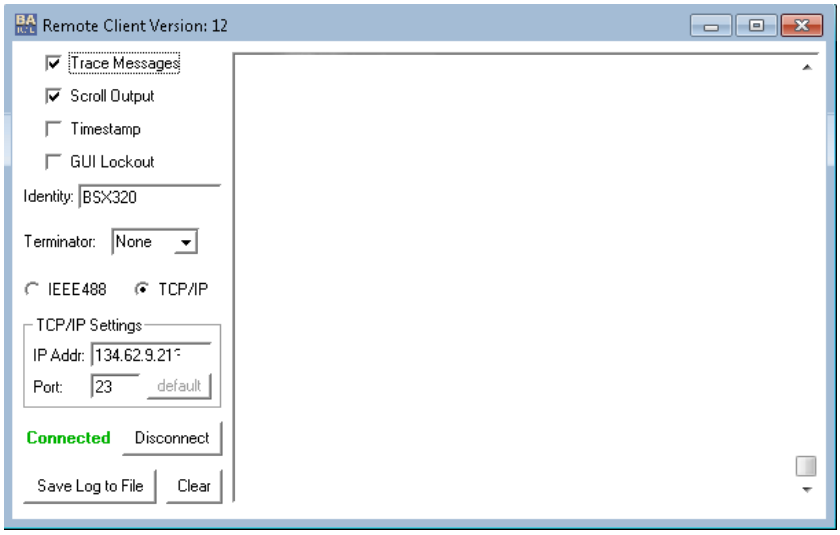

Figure 5: Remote Client window

Windows PC software

For best system performance, load the USB3.1 Automation Software on an external PC or laptop computer.

1. Install the USB3.1 Automation Software on the PC.

NOTE. *Check with your Tektronix Sales Representative for any later versions of the USB3.1 Automation Software.*

---

2. Once installed, open the application and click Preferences > Equipment.
3. Open the window for each instrument and enter the IP address as instructed in steps 4 and 5.
4. Enter the BERTScope IP address in the Address fields for both the BERTScope and for the Switch.
5. Enter the oscilloscope IP address in the Address fields for both the oscilloscope and SigTest server.
6. Click Start Connect. The Start Connect window appears.
7. Click Connect for all four entries. The red tabs at the bottom of the window change to green when connected.
8. If the BERTScope is being used for the first time for USB3.1 testing, check all of the boxes for the data pattern files in the lower half of the Start Connect window, and then click Download.

USB3.1 Typical test setups

Three typical test setups are shown in this section. The USB test fixtures in the drawings are typical test fixtures; your test fixtures might differ. For details about the test fixtures, adapters, and other equipment required for these setups, see your USB user documentation.

USB3.1 Amplitude Calibration setup

Refer to the following figure and make the connections to the equipment as shown:

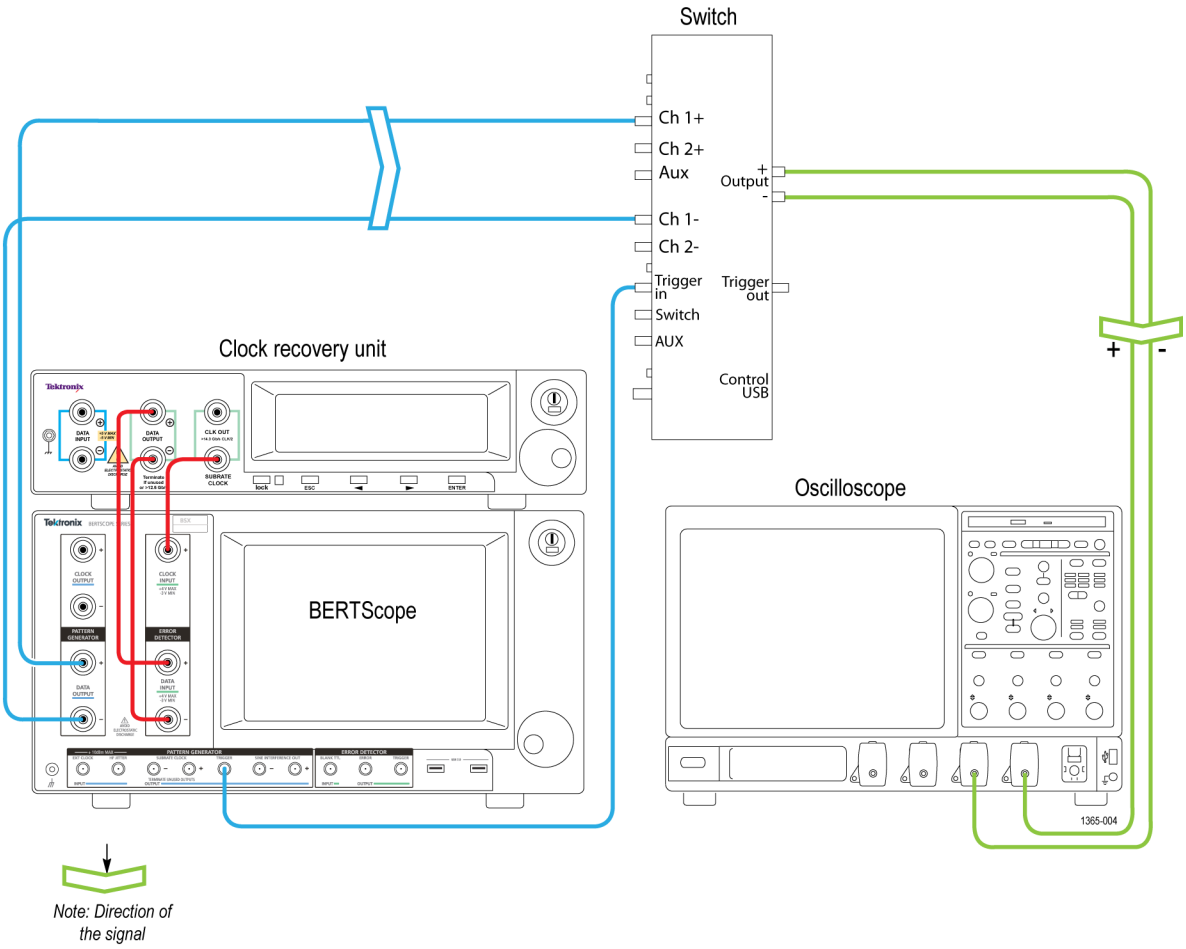

Figure 6: USB3.1 Amplitude Calibration setup

USB3.1 Host, Device, Captive Cable, Stressed Eye Calibration setup

Refer to the following figure and make the recommended connections to the equipment as shown (your actual connections might differ depending on the USB equipment; you should check the USB3.1 Test Fixture Topologies document found on the USB.org web site for the correct cabling diagrams):

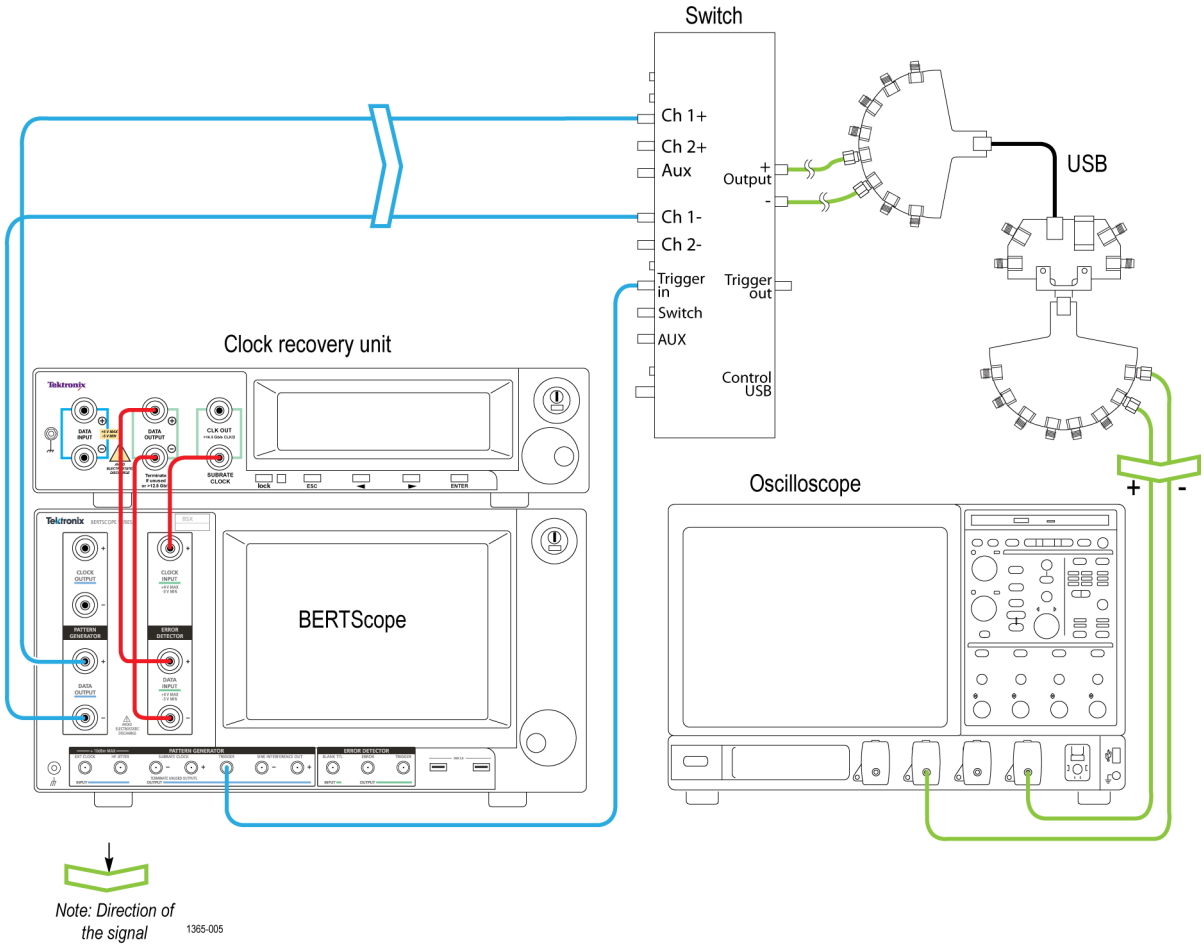

Figure 7: USB3.1 Host, Device, Captive Cable, Stressed Eye Calibration setup

BSXPCI4CEM Receiver testing application

Testing overview

The following procedures provide high-level information to connect the hardware for your PCI4CEM receiver testing applications. Connection diagrams for each setup are shown later in this procedure. (See page 14, *Typical BSXPCI4CEM test setups*.) You should also refer to your user documentation for more details and for other test configurations.

1. Make the USB and Serial Port connections.
2. Load and configure the oscilloscope software.
3. Load and configure the BERTScope software.
4. Load and configure the PCIe 3.0 Automation software on your PC (this software can instead be loaded on the oscilloscope or BERTScope, but is not recommended)
5. Refer to the online information to run each test.

Required equipment list

You will need the following equipment and software to complete these procedures.

- BERTScope BSX320, BSX240, or BSX125 with option STR installed
- DPO/MSO73304, or DPO75004DX/SX, or related real-time oscilloscope
- Ethernet switch, 10/100 Mbps minimum and Internet connection
- (3) Ethernet cables
- BSXSICOMB, which consists of (2) SI Combiners
- PCI-SIG Compliance Base Board (CBB) test fixture. Either Gen3 or Gen4 fixtures can be used, as desired
- SigTest tool (application software downloadable from www.PCISig.com; search SigTest tool)
- (Recommended) PC with Windows 7 OS or Windows 10 OS
- (Optional) PCI Express 3.0 Receiver Test MOI for CEM spec (downloadable from www.tektronix.com; search for PCI Express 3.0 Receiver Test MOI)

Ethernet connections

The following setup uses an Ethernet switch, but you can use your internal Ethernet network instead. Using three Ethernet cables, make the following Ethernet connections on the rear panels of the equipment.

1. Insert an Ethernet cable into the Ethernet switch. Connect the other end of the cable to the BERTScope.
2. Insert another Ethernet cable into the Ethernet switch. Connect the other end of the cable to the oscilloscope.
3. Insert a third Ethernet cable into the Ethernet switch. Connect the other end of the cable to the Ethernet port on your computer.

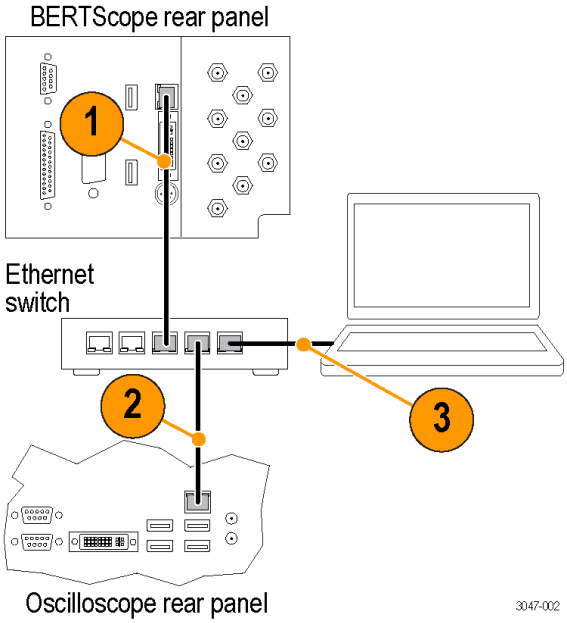

Figure 8: Typical Ethernet connections

Load and configure the software and drivers

Oscilloscope software

1. Load Visa Socket Gateway on the oscilloscope. This software must be running on the oscilloscope to allow communication between the instruments.
2. Record the IP address; it is used later in the *Windows PC Software* procedure.

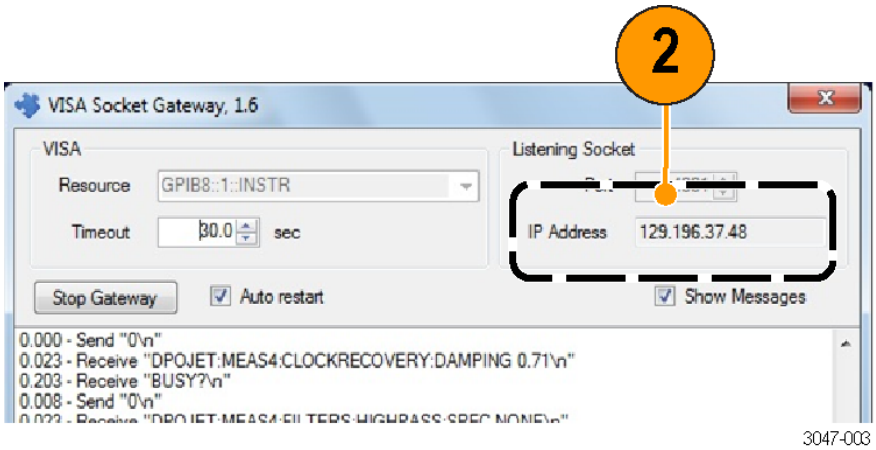

Figure 9: Record the IP address for later use

3. Load the SigTest application software on the oscilloscope.
4. Load the SigTest Server software on the oscilloscope. This software must be running on the oscilloscope to allow communication to the SigTest application.
5. Record the IP address of the SigTest application; it is used later in the *Windows PC Software* procedure.

BERTScope software

1. Enable the Remote Client on the BERTScope:
   - Click start > Programs > BERTScope > Remote Client.
   - Select TCP-IP.
   - Record the IP address; it is used later in the *Windows PC Software* setup procedure.

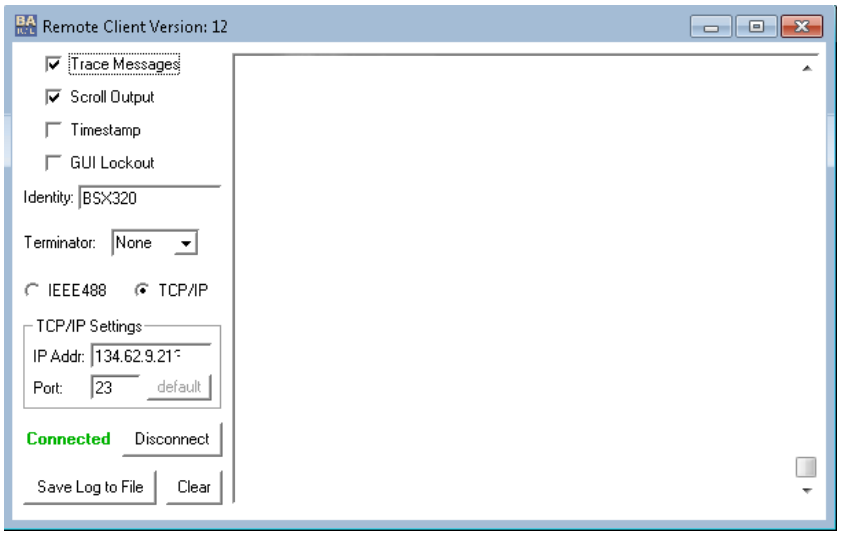

Figure 10: Remote Client window

Windows PC software

For best system performance, load the PCIe 3.0 Automation Software on an external PC or laptop computer.

1. Install the PCIe 3.0 Automation Software on the PC.

NOTE. *NOTE. Check with your Tektronix Sales Representative for any later versions of the PCIe 3.0 Automation Software.*

2. Once installed, open the application and click **Preferences**.
3. Open the window for each instrument and enter the IP address as instructed below:
   - **a.** Enter the BERTScope IP address in the Address field for the BERTScope.
   - **b.** Enter the oscilloscope IP address in the Address fields for both the oscilloscope and SigTest server.
4. Click **Connect**. The Connect window appears.

5. Click **Connect** for all three entries. The red tabs at the bottom of the window change to green when connected.
6. If the BERTScope is being used for the first time for PCIe testing, check all of the boxes for the data pattern files in the lower half of the Start Connect window, and then click **Download**.

Typical BSXPCI4CEM test setups

Three typical PCIe test setups are shown in this section. The test fixtures shown in the following figures are typical test fixture; your test fixtures might differ. For details about the test fixtures, adapters, and other equipment required for these setups, refer to your PCIe user documentation.

BSXPCI4CEM Amplitude Calibration setup

Refer to the following figure and make the connections to the equipment as shown:

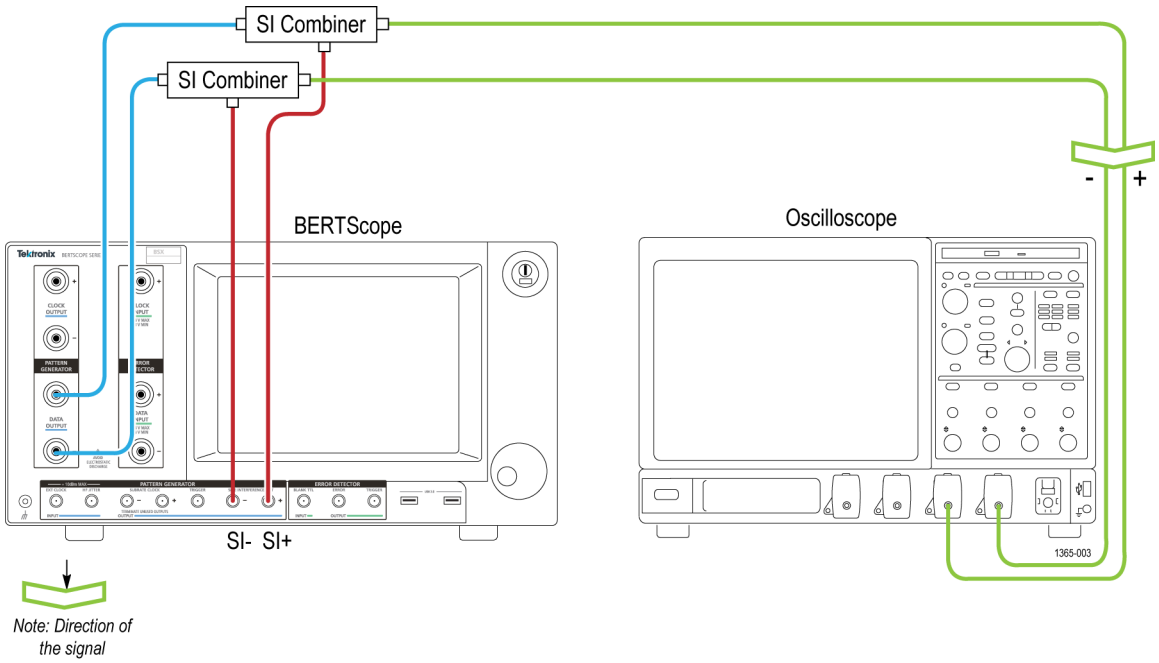

Figure 11: BSXPCI4CEM Amplitude Calibration setup

BSXPCI4CEM Stressed Eye Calibration AIC setup

The following figure shows connections for a PCIE Card Gen3.0 setup. The connections for a PCIE Card Gen4.0 setups might differ.

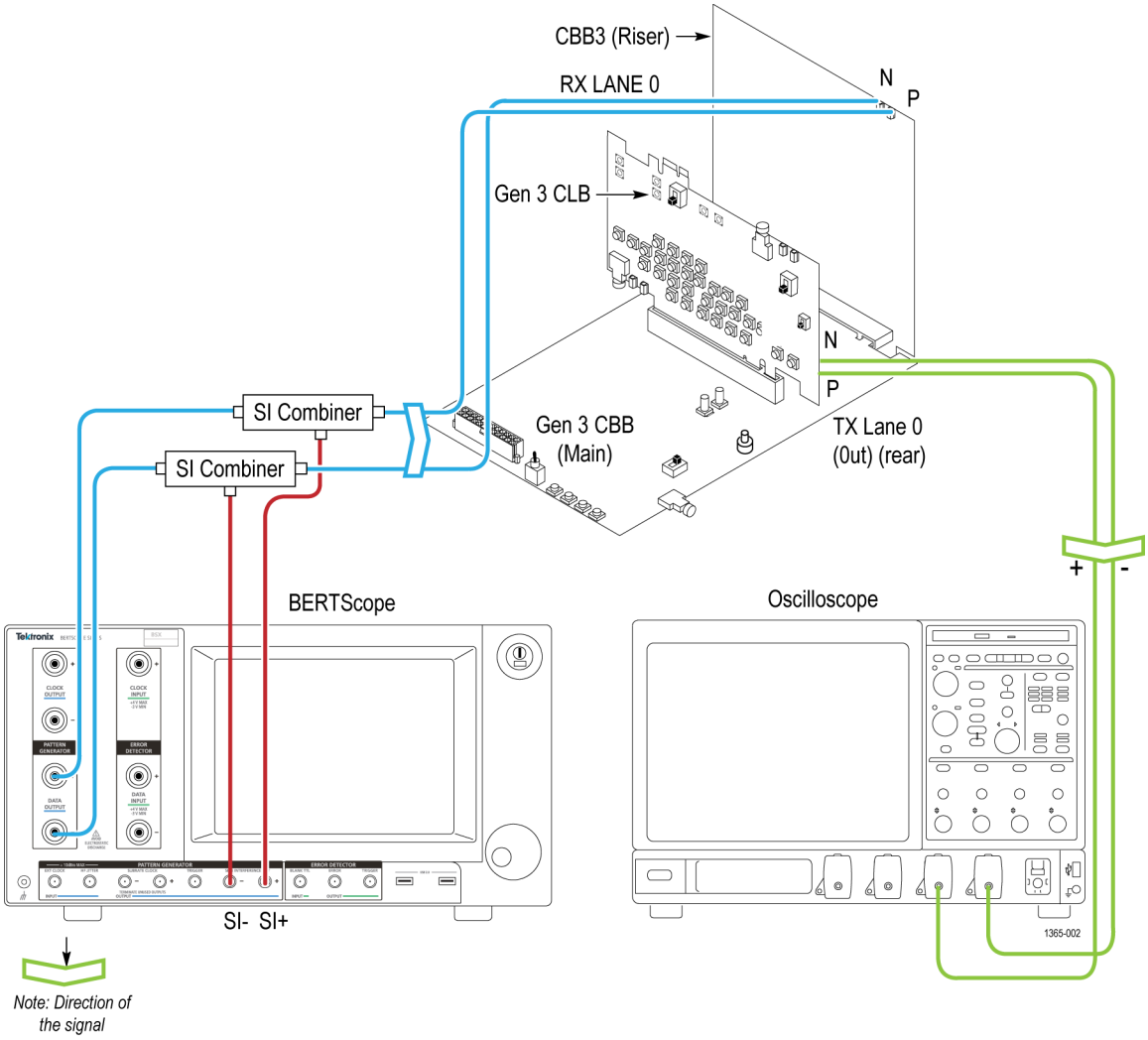

Figure 12: BSXPC1ICEM Stressed Eye Calibration AIC setup

BSXPCI4CEM Stressed Eye Calibration System setup

The following figure shows connections for a PCIE Gen3.0 system. The connections for a PCIE Card Gen4.0 might differ.

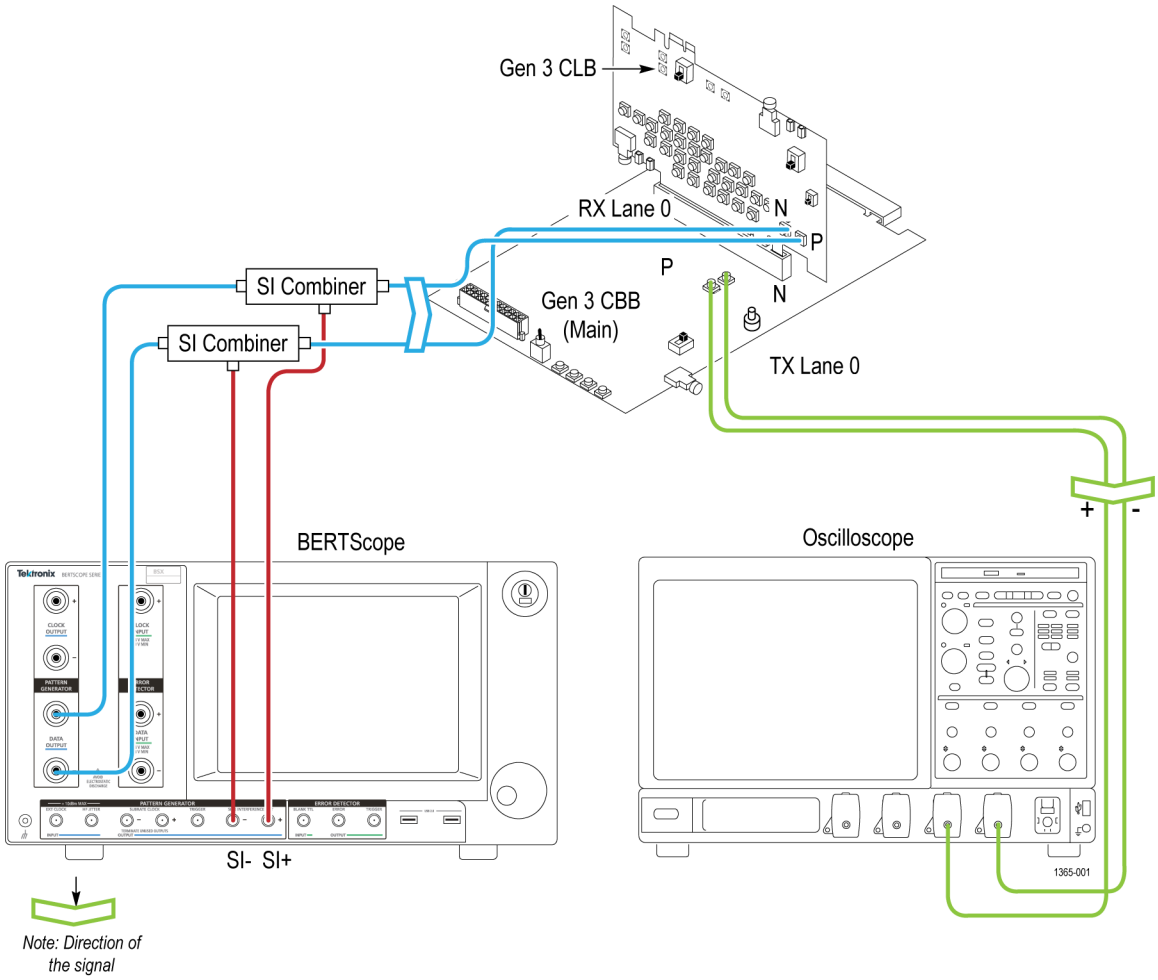

Figure 13: BSXPCI4CEM Stressed Eye Calibration System setup

PCI 3.0 (AIC) Preset and BER tests setup

The following figure shows the connections for the PCI Card Gen 3.0 setup; the connections for a PCI Card Gen 4.0 setups might differ.

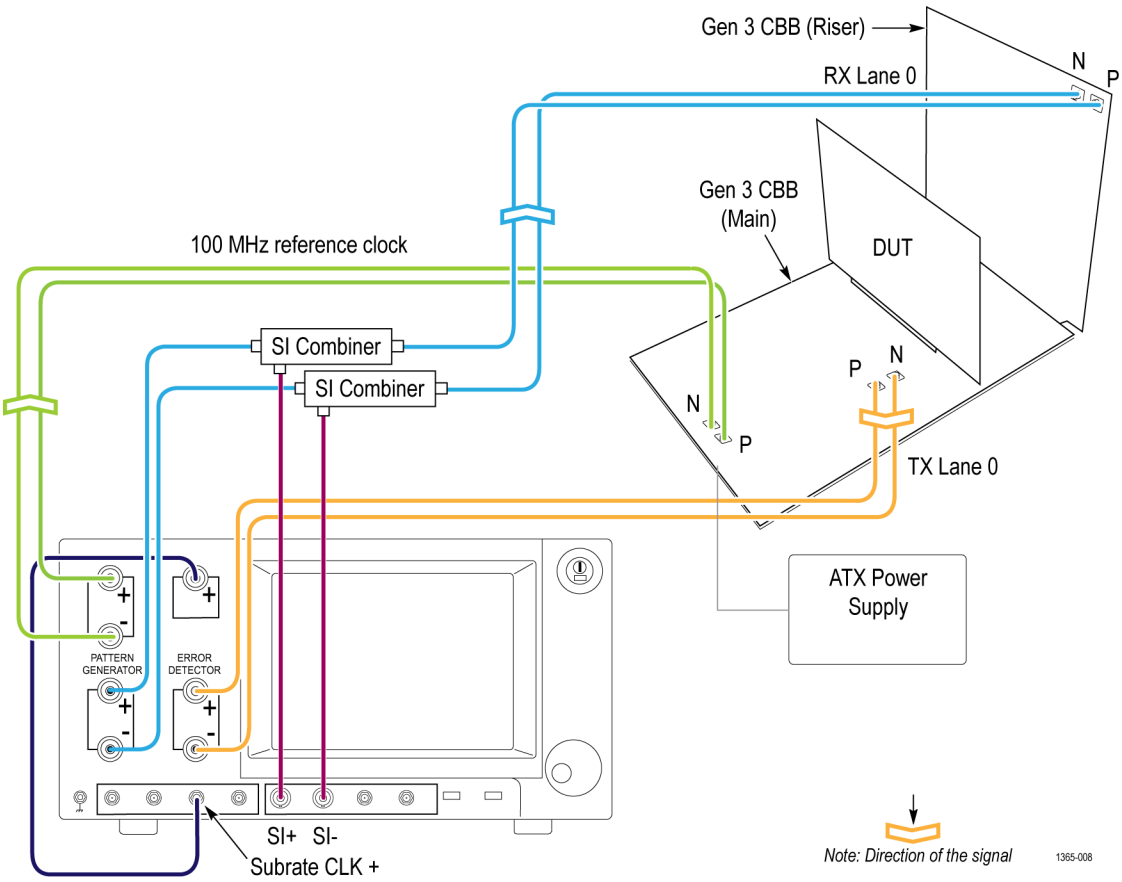

Figure 14: PCI 3.0 (AIC) Preset and BER tests setup

PCI 3.0 (System) Preset and BER tests setup

The following figure shows the connections for the PCI Card Gen 3.0 setup; the connections for a PCI Card Gen 4.0 setups might differ.

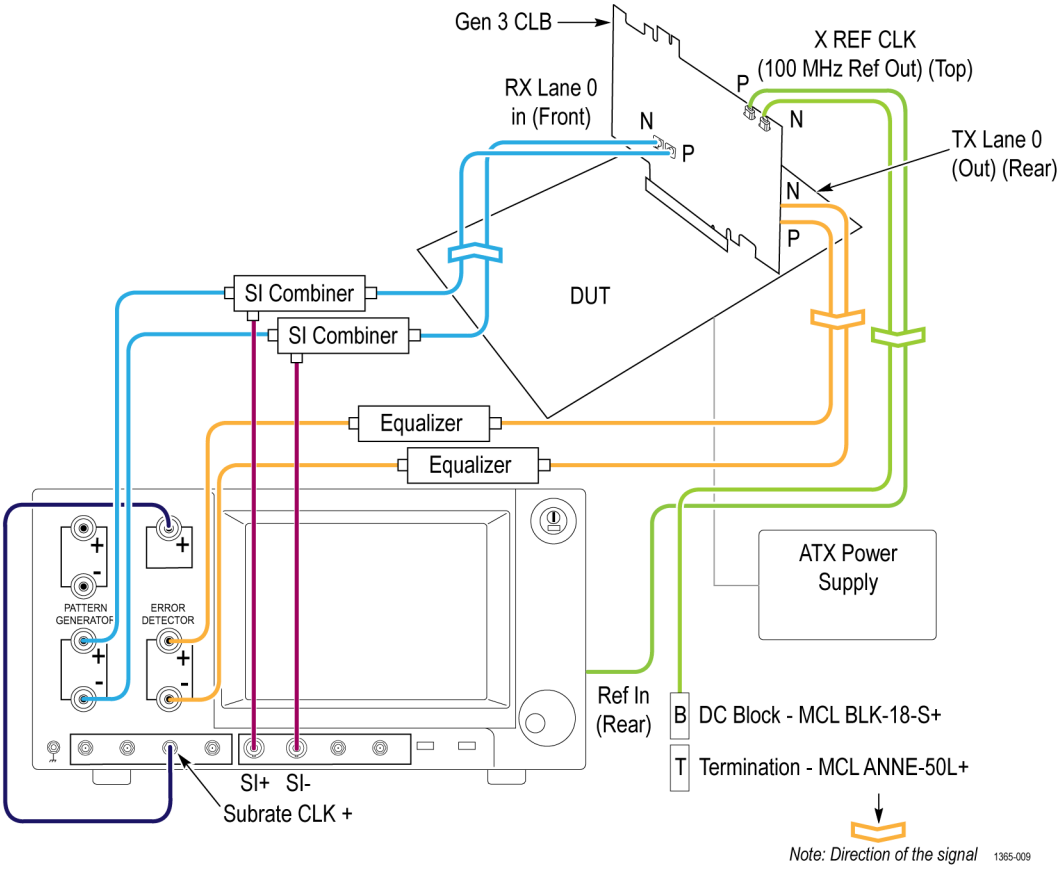

Figure 15: PCI 3.0 (System) Preset and BER tests setup